ORDER NO. EMID891245
A4

Service Manual

Electronic Organ

SX-EX25/L

(M), (MC), (EN), (EI), (EH), (EB), (EF), (EZ), (EW), (EP), (EK), (XL), (XR), (XS), (XD), (X), (N)

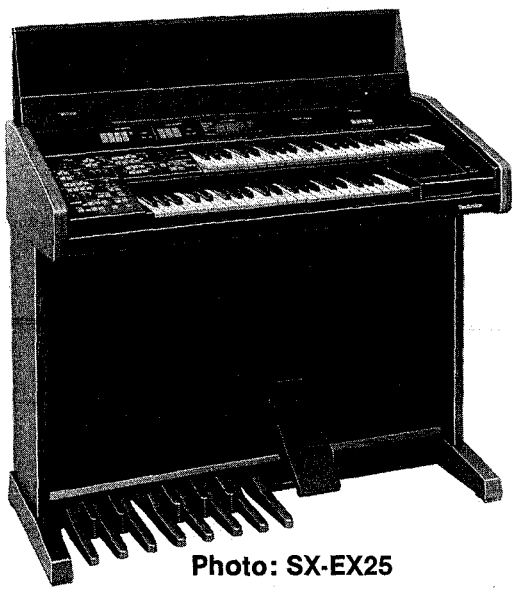

Photo: SX-EX25

AREAS

(M)	U.S'A.	(EK):	the United Kingdom
(MC)	Canada	(XL):	New Zealand
(EN):	Norway, Sweden, Denmark, Finland	(XR):	Australia
(EI):	Italy	(XS):	Malaysia, Singapore, South Africa
(EH):	Holland	(XD):	Saudi Arabia
(EB):	Belgium	(X):	the Middle East, Indonessia, Hong Kong, the Philippines, Taiwan, Thailand
(EF):	France, Austria		
(EZ):	Germany		
(EW):	Switzerland	(N):	Japan
(EP):	Spain		

Specifications

KEYBOARD		UPPER MANUAL: 44 KEYS LOWER MANUAL: 44 KEYS PEDAL KEYBOARD: 13 KEYS
UPPER VOICES	POLY	PIANO, E PIANO, HARPSICHORD, GUITAR, JAZZ GUITOR, HAWAIIAN GUITAR, SYNTH PERC, SYNTH BRASS, ACCORDION, CLARINET, ORGAN, TENOR SAX, STRINGS, TROMBONE, BRASS, TAB VOICES: FLUTE 16′, 8′, 4′, 2′, PERC 2-2/3′, UPPER POLY VOLUME
	SOLO	FLUTE, PAN FLUTE, SYNTH LEAD, CLARINET, ALTO SAX, TROMBONE, TRUMPET, VIOLIN, UPPER SOLO VOLUME
LOWER VOICES	POLY	PIANO, E PIANO, HARPSICHORD, GUITAR, JAZZ GUITAR, SYNTH BRASS, CLAVI, TENOR SAX, ORGAN, BRASS, STRINGS, TAB VOICES: FLUTE 8′, 4′, 2′, LOWER POLY VOLUME
BASS VOICES		BASS 16′, 16′ +8′, 8′, SYNTH, TUBA, ELECTRIC, CHOPPER, ACOUSTIC, BASS VOLUME
ORCHESTRAL CONDUCTOR		UPPER (SOLO, POLY)
EFFECT	SUSTAIN	UPPER, LOWER, BASS
	TREMOLO	UPPER TAB VOICES, LOWER TAB VOICES, TAB TREMOLO: SLOW/FAST
	CELESTE	UPPER POLY, LOWER POLY, UPPER TAB VOICES, LOWER TAB VOICES
GLIDE		FOOT SWITCH
TECHNI-CHORD		ON, CLOSE/PROGRAM. RECORD*
RHYTHM	SELECTOR	MARCH, BALLAD. 8 BEAT, CHA-CHA, RHUMBA, JAZZ WALTZ, WALTZ, TANGO, SHUFFLE, SWING, SALSA, 16 BEAT, DISCO 1, 2, BOSSA NOBA, SAMBA
	CONTROLS	SYNCHRO & BREAK, START/STOP, TEMPO, DRUMS VOLUME
FILL IN & INTRO		1, 2, SOLO
ENDING		ON
PLAY MODE		PCC, FINGERED, MEMORY
BASS & ACCOMP		1/2, MELODIC, ACCOMP VOLUME
ONE TOUCH PLAY		○

TRANSPOSE		CONTROL (G-C-F♯)
VOICE SETTING COMPUTER		SET, 1~4, CANCEL
PROGRAM CHORD COMPUTER		PCC, RECORD*, (LOWER KEYBOARD: 𝄞, ◄, ►, ⌒, ⌒, ⌒, 𝄋, ✥, D.S., ⊣, ⊂⊃, ⊣⊢)
PLAY SEQUENCER		SOLO, UPPER, LOWER, BASS, RECORD*
FULLBAND SETTING COMPUTER		FSC, RECORD*, LOWER KEYBOARD 1~5
TUNING		○
PROGRAMMABLE FUNCTION SWITCH		FOOT SWITCH, RECORD*
MUSICAL DISPLAY		TEMPO, BEAT, CHORD, PLAY SEQUENCER, PROGRAM CHORD COMPUTER, FULBAND SETTING COMPUTER, MIDI
MODE SET		MODE SET, RECORD*, MIDI: P CHANGE, EFFECT, SUSTAIN, MIDI CLOCK, START/STOP, SONG SELECT, OCTAVE +/−
JACKS	MIDI	IN, OUT, THRU
	OTHERS	LINE OUT, AUX IN, PEDAL IN, HEADPHONES JACK
OTHERS		POWER SWITCH, MAIN VOLUME, EXPRESSION PEDAL, AC CORD INPUT, INITIAL KEY (LOWER KEYBOARD), DIGITAL DISK RECORDER SLOT
OUTPUT		50W
SPEAKERS		20cm×1 13cm×6cm×1 6.5cm×1
POWER REQUIREMENT		100W: NORTH AMERICA, SCANDINAVIA 110W: OTHERS AC 120/220/240V 50Hz/60Hz AC 120V 60Hz (NORTH AMERICA) AC 220V 50/60Hz (WEST GERMANY, SCANDINAVIA)
CABINET (W×H×D)		EX25L: 110.2cm×90.4cm×43.3cm (43-3/8″×35-19/32″×17-1/16″) EX25: 110.2cm×90.6cm×43.5cm (43-3/8″×35-21/32″×17-1/8″)
NET WEIGHT (WITHOUT BENCH)		EX25L 46Kg (101.4 lbs) EX25 49Kg (108 lbs)

*Common RECORD button is used for these buttons.
• Specifications are subject to change without notice for further improvement.

Technics

Matsushita Electric Industrial Co., Ltd.
Central P.O. Box 288, Osaka 530-91, Japan

Matsushita Services Company
50 Meadowland Parkway,
Secaucus, New Jersey 07094

Panasonic Hawaii, Inc.
99-859 Iwaiwa Street
P.O. Box 774
Honolulu, Hawaii 96808-0774

Panasonic Sales Company, Division of Matsushita Electric of Puerto Rico, Inc.
San Gabriel Industrial Park
65th Infantry Ave. Km. 9.5
Carolina, P.R. 00630

CONTENTS

■ **PART I (INTRODUCTION)**
SAFETY PRECAUTION I-1
HOW TO ASSEMBLE THE ORGAN I-2
INSTALLATION OF SY-FD3 (OPTION) I-3
ARRANGEMENT OF CONTROL PANEL I-4
BASIC FUNCTIONS I-4
DIFFERENCE BETWEEN SX-EX25L AND SX-EX25 ..... I-6
CONNECTION TERMINALS I-7
KEYBOARD RANGES I-7
ADJUSTMENT PROCEDURE I-8
PARTS LOCATION I-8
DISASSEMBLY INSTRUCTIONS I-9
PRECAUTIONS BEFORE SERVICING I-11
SYMPTOMS WHICH APPEAR TO BE SIGNS OF TROUBLE I-12
ERROR DISPLAY I-13
MIDI IMPLEMENTATION CHART I-14

■ **PART II (SCHEMATIC DIAGRAM)**
WIRING CONNECTION DIAGRAM II-1
BLOCK DIAGRAM II-3
MAIN FDCN MAIN, FD CONNECTOR CIRCUIT BOARD II-6
MAIN FDCN MAIN, FD CONNECTOR CIRCUIT DIAGRAM II-11
DP DRUM PERCUSSION CIRCUIT DIAGRAM & CIRCUIT BOARD II-15
CPSL SIDE CONTROL PANEL CIRCUIT BOARD II-17
CPSL SIDE CONTROL PANEL CIRCUIT DIAGRAM II-19
CPL CP CONTROL PANEL LEFT, RIGHT CIRCUIT BOARD II-21
CPL CP CONTROL PANEL LEFT, RIGHT CIRCUIT DIAGRAM II-23
AS HP AMP & POWER SUPPLY, HEADPHONES CIRCUIT DIAGRAM II-25
AS AMP & POWER SUPPLY CIRCUIT BOARD II-27
HP HEADPHONES CIRCUIT BOARD II-29
MKB MANUAL KEYBOARD CIRCUIT DIAGRAM & CIRCUIT BOARD II-30
PKB EXP PEDAL KEYBOARD, EXPRESSION CIRCUIT DIAGRAM II-30
PKB PEDAL KEYBOARD CIRCUIT BOARD II-30
EXP EXPRESSION CIRCUIT BOARD II-32

■ **PART III (REPLACEMENT PARTS LIST)**
REPLACEMENT PARTS LIST (P.C.B. and Wiring Parts) III-1
REPLACEMENT PARTS LIST (Cabinet and Chassis Parts) III-7
EXPLODED VIEWS OF CABINET III-9
EXPLODED VIEWS OF STAND AND BENCH III-11
PACKING III-14

SAFETY PRECAUTION (This "safety precaution" is applied only in U.S.A.)

• Safety Precaution

1. Before servicing, unplug the power cord to prevent an electric shock.
2. When replacing parts, use only manufacturer's recommended components for safety.
3. Check the condition of the power cord. Replace if wear or damage is evident.
4. After servicing, be sure to restore the lead dress, insulation barriers, insulation papers, shields, etc.
5. Before returning the serviced equipment to the customer, be sure to make the following insulation resistance test to prevent the customer from being exposed to a shock hazard.

• Insulation Resistance Test

1. Unpulg the power cord and short the two prongs of the plug with a jumper wire.
2. Turn on the power switch.
3. Measure the resistance value with ohmmeter between the jumpered AC plug and each exposed metal cabinet part, such as screw heads, connectors, control shafts, handle brackets, etc..
   Mesurements should range from 4MΩ to infinity to all exposed parts.

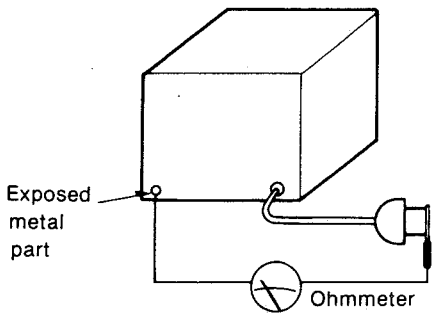

Resistance=4MΩ to ∞

HOW TO ASSEMBLE THE ORGAN

■ Screw kit

- Bolt Ⓐ ( ) .....4 pcs.
- Bolt Ⓑ ( ) .....4 pcs.
- Bolt Ⓒ ( ) .....4 pcs.
- Cord clamper.....3 pcs.

1 Use for black bolts Ⓐ and secure each side plank to the speaker box, then use for metal bolts Ⓑ to mount it on to the pedal as shown in the figure.

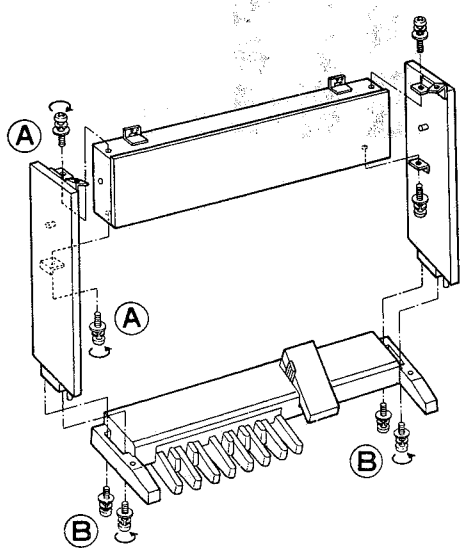

[Fig. 1]

2 Attach the rear board as shown.

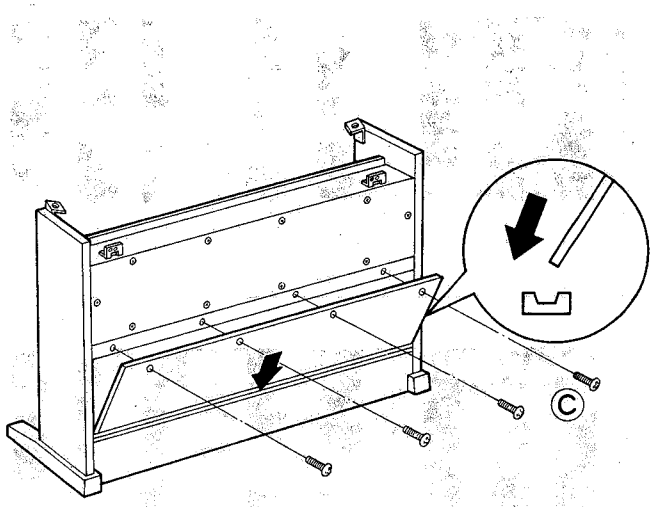

[Fig. 2]

3 Place the upper organ part on the lower stand part, making sure to fit the metal pieces together.

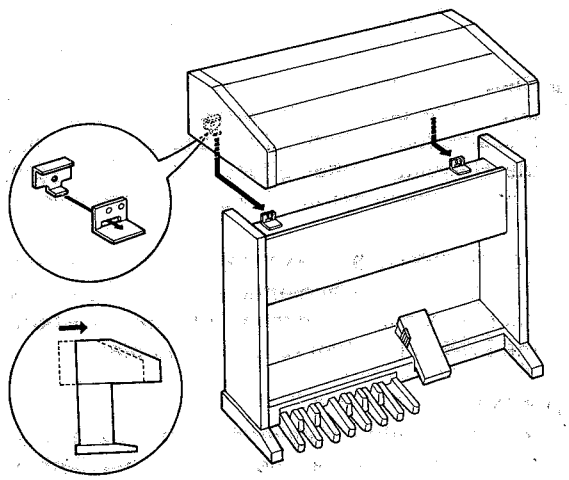

[Fig. 3]

4 Using four bolts Ⓐ, secure the upper organ part to the lower stand part as shown in the figure.

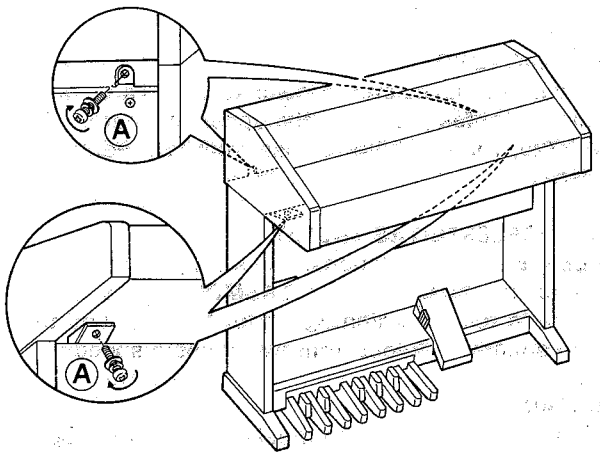

[Fig. 4]

5 Connect the power cord, speaker cord and pedal cord as shown.

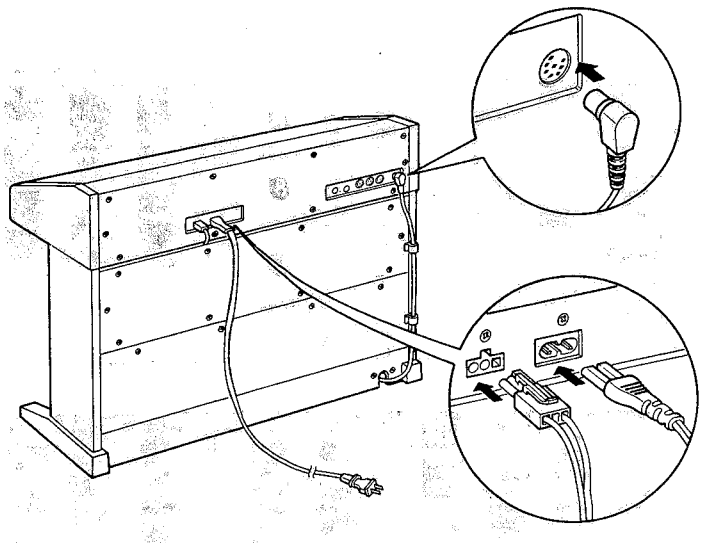

[Fig. 5]

6 Open the keyboard cover, and set it as shown so it can be used as a music rack.
EX-25L is not require this procedure.

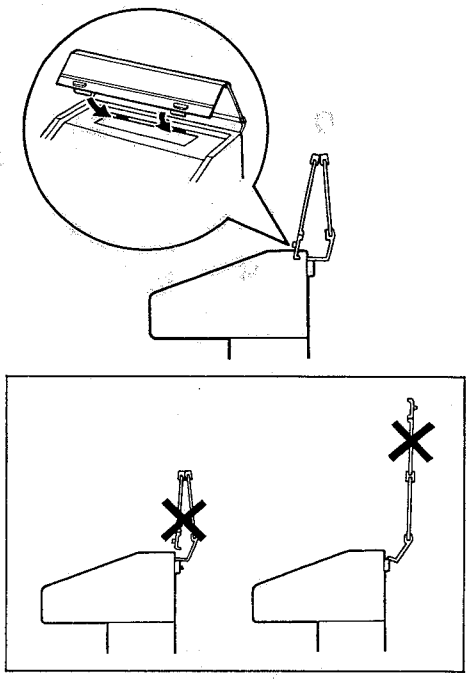

[Fig. 6]

INSTALLATION OF SY-FD3 (OPTION)

Make sure that the Technics organ is turned off. Remove the screw from under the right side of the keyboard. The cover can now be removed from the Digital Disk Recorder compartment.

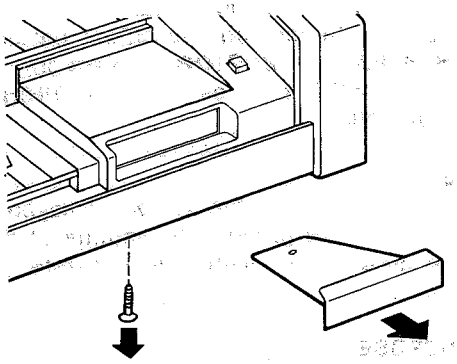

[Fig. 7]

3. Insert the Digital Disk Recorder into the compartment opening and push it in firmly as far as it will go. Secure the Digital Disk Recorder with the screw that you removed in step 2.

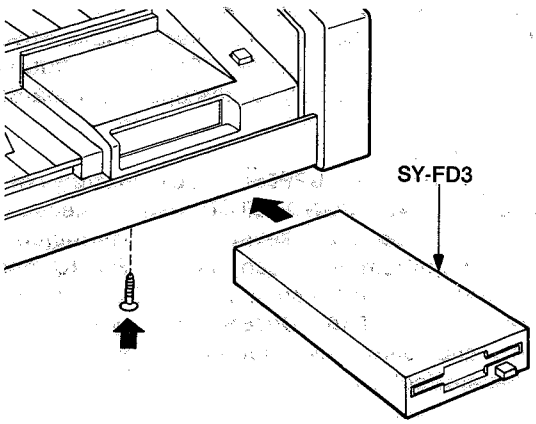

[Fig. 8]

⑮ **ENDING**
When this button is pressed, an ending rhythm pattern will be played and then the rhythm will stop.

⑯ **ONE TOUCH PLAY**
With this special feature, you select a rhythm and appropriate voice and effects are automatically set.

⑰ **PLAY MODE**
Select the type of accompaniment—either normal or automatic—or choose the accompaniment you programmed beforehand in the **PROGRAM CHORD COMPUTER.**

⑱ **Auto Play Chord**
This feature is selected when the **FINGERED** button in the **PLAY MODE** is turned on. When a single key on the lower keyboard is pressed, a full chord and a bass note sound. Play major, minor, seventh or minor seventh chords and the bass note just by pressing one key.

⑲ **RECORD**
This button is used to store the contents of the organ's various memories, including the **PROGRAM CHORD COMPUTER, PLAY SEQUENCER** or to store your performance with the optional Digial Disk Recorder. It is also used when setting the functions of the programmable switches.

⑳ **PROGRAM CHORD COMPUTER**
Use this feature to store the chord accompaniment of an entire song in the organ, then have it played back automatically while you play the melody. With the keys at the right end of your lower keyboard, store whole, half-or quarter-measure chords, specify repeat play, and more.

㉑ **Programmable function switch**
The foot switch can be programmed to conveniently turn on and off other functions, for example the rhythm start/stop or **TECHNI-CHORD.**

㉒ **TECHNI-CHORD harmony styles**
There are four harmony styles available for you to select from and store in the **CLOSE/PROGRAM** button of the **TECHNI-CHORD.**

㉓ **TREMOLO speed adjustment**
The **SLOW** and **FAST** buttons are also used to adjust the tremolo slow and fast speeds as desired.

㉔ **Tuning**
The sliding **TEMPO** control can also be used to adjust the pitch of the entire organ for ensemble play with other instruments.

㉕ **Internal memory**
The internal memory allows you to record your entire performance in the **PLAY SEQUENCER** or just the registrations and other stored functions for five complete tunes in the **FULLBAND SETTING COMPUTER.**

㉖ **PLAY SEQUENCER**
Use this memory to separately play and store the parts—bass, upper keyboard, lower keyboard and solo voices—of an entire tune. Then have the whole ensemble performance played back automatically.

㉗ **FULLBAND SETTING COMPUTER**
The voices, effects, chord and rhythms for up to five songs can be stored for easy recall.

㉘ **Optional Digital Disk Recorder**
If the Digital Disk Recorder is installed, you can have virtual unlimited storage and playback of your organ performances. Several tunes or one very long tune can be stored on each digital memory disk.

DIFFERENCE BETWEEN SX-EX25L AND SX-EX25

• SX-EX25L: The music rack is as shown below.

• SX-EX25: The keyboard cover is attached.

SX-EX25L	SX-EX25
• Music Rack 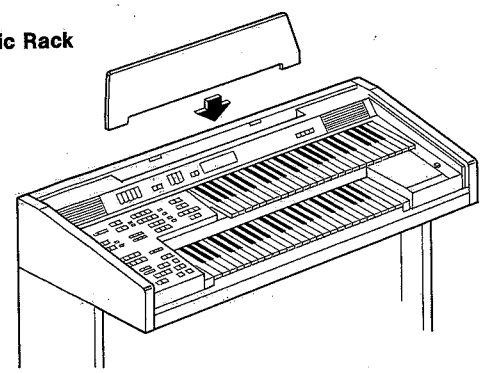 [Fig. A]	• Keyboard Cover 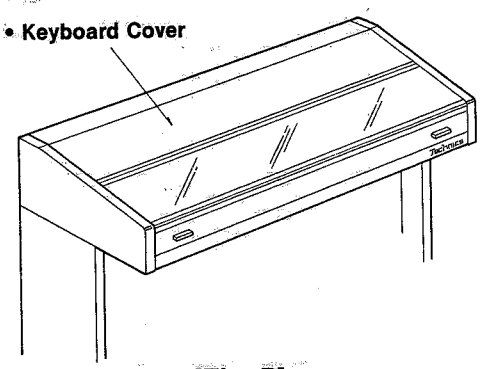 [Fig. B]

CONNECTION TERMINALS

(On the rear of the organ)

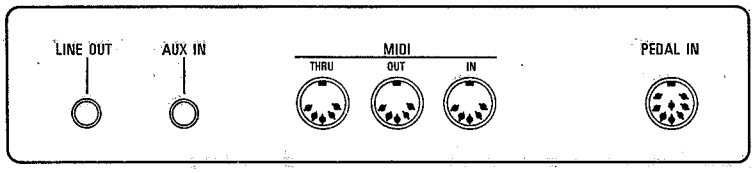

■ **LINE OUT** (output level 300mV, 600Ω)
Use these outputs to connect the audio output of the organ to other audio equipment, such as a tape deck, VCR, audio mixer, tone cabinets, or additional amplifier/speaker systems.

■ **PHONES**
(Use headphones with 16 ohm impedance.) For silent practice headphones may be used. When plugged in, the organ's speaker system is automatically switched off, and the entire organ is heard only through the headphones.

■ **AUX IN** (input level 500mV, 20kΩ)
Use these inputs to connect the audio outputs of other audio equipment, such as a tape deck, VCR, tuner, or an audio mixer, for playback through the organ.

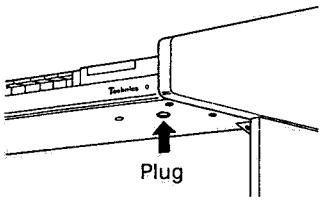

KEYBOARD RANGES

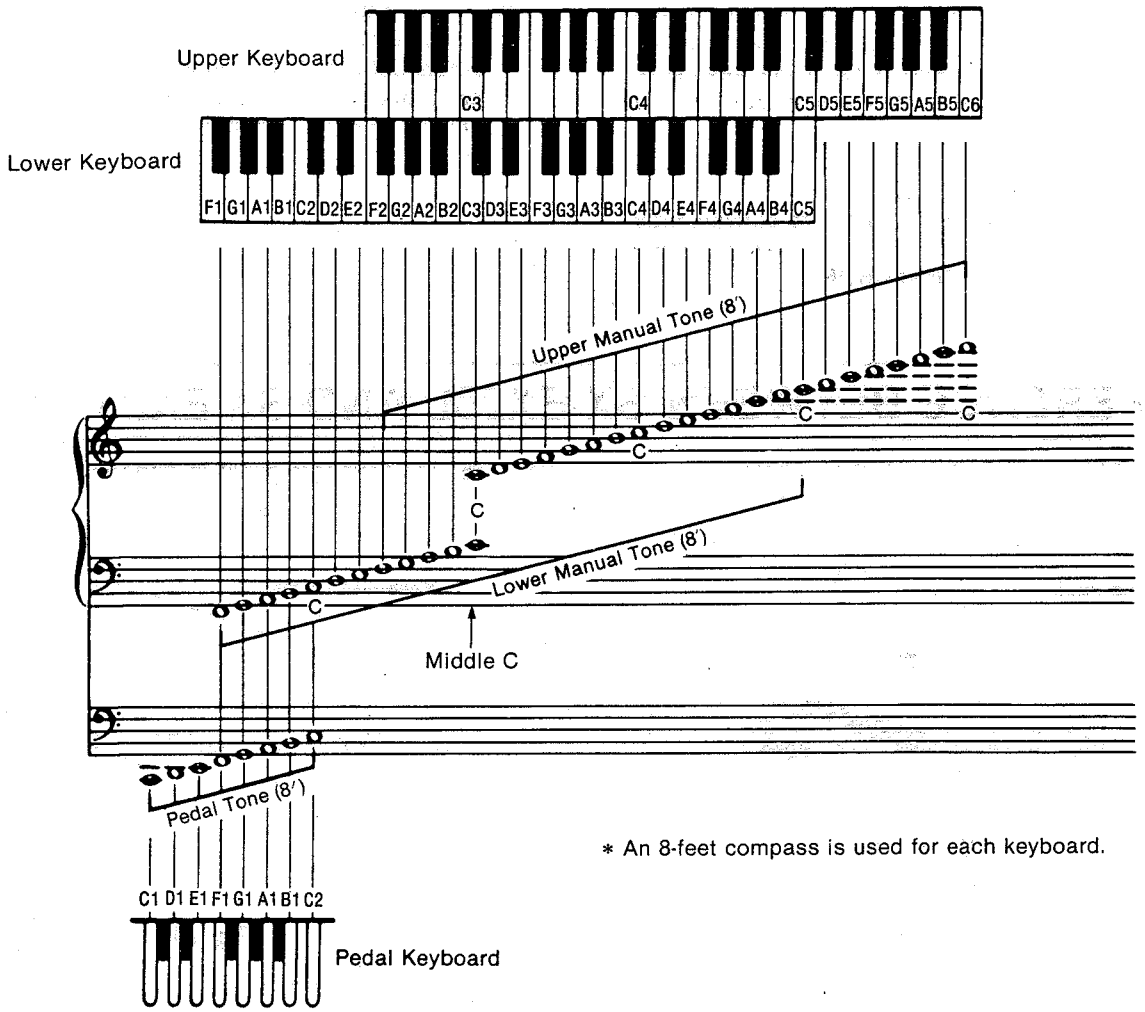

* An 8-feet compass is used for each keyboard.

ADJUSTMENT PROCEDURE

ADJUSTMENT	MEASURING CONDITIONS	EQUIPMENT	ADJUSTMENT P.C.B.	ADJ. POINT	CONNECT METER TO	METER READING
BBD Bias	Any position	Oscilloscope and Oscillator	MAIN P.C.B.	VR1	Check point ㊽	Shown below
	1. Connect the oscilloscope to check point ㊽ of MAIN P.C.B. 2. Input 1 KHz sine-wave to IC50 ③ pin by oscillator through capacitor of less than 50V 1μF. Then adjust the output level of the oscillator until the sine wave on the oscilloscope is clipped. 3. Adjust VR1 so that the output waveforms on the oscilloscope are evenly clipped at top and bottom.				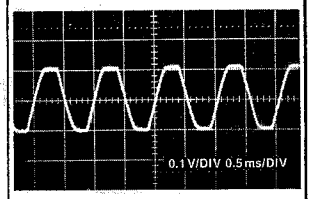	

PARTS LOCATION

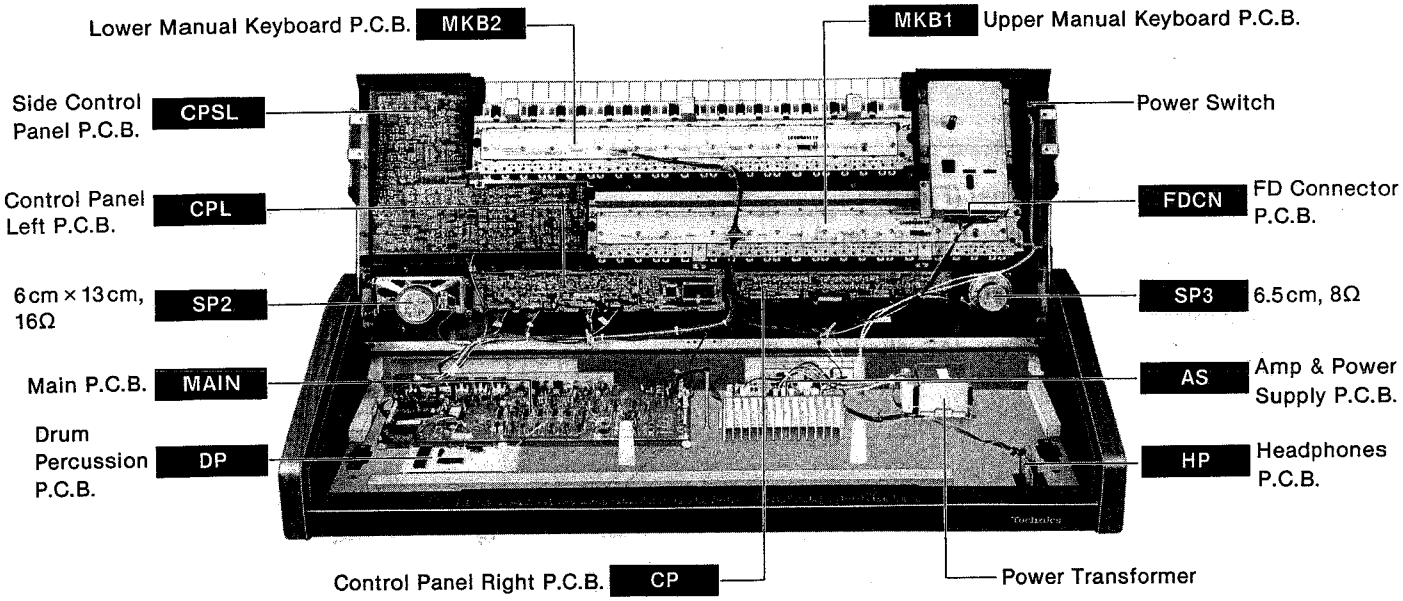

[Photo-1]

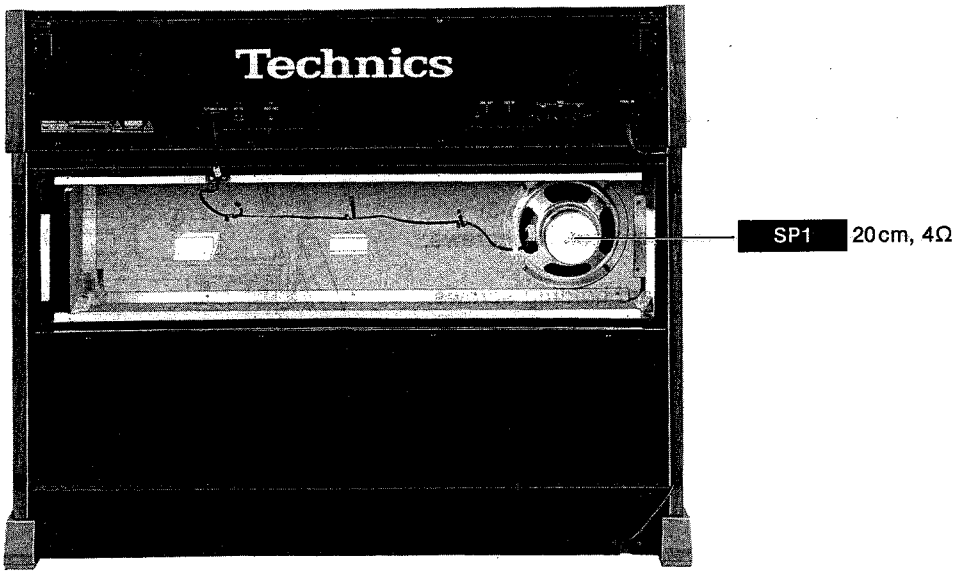

[Photo-2]

DISASSEMBLY INSTRUCTIONS

1 Removing the Keyboard Cover (Fig. 9)

CAUTION: SX-EX25L is not require this procedure.

① Remove the keyboard cover holding screws. (Ⓐ 4 pcs.)
② Lift the keyboard cover up. (As shown by the arrow.)

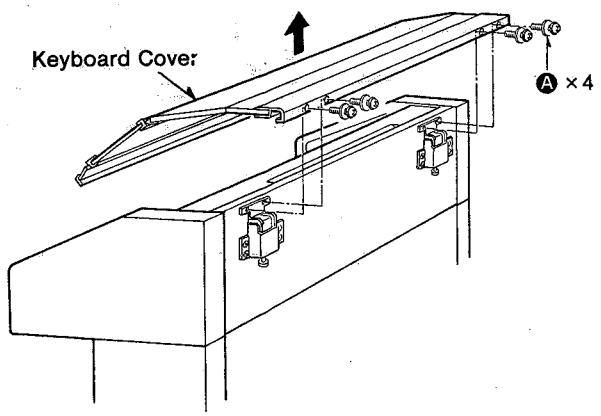

[Fig. 9]

2 Removing the upper rear board (Fig. 10)

① Remove the Keyboard Cover. (See Step 1)
② Remove the upper rear board holding screws. (Ⓑ 12 pcs.) ∗(SX-EX25L: Ⓑ 13 pcs.)

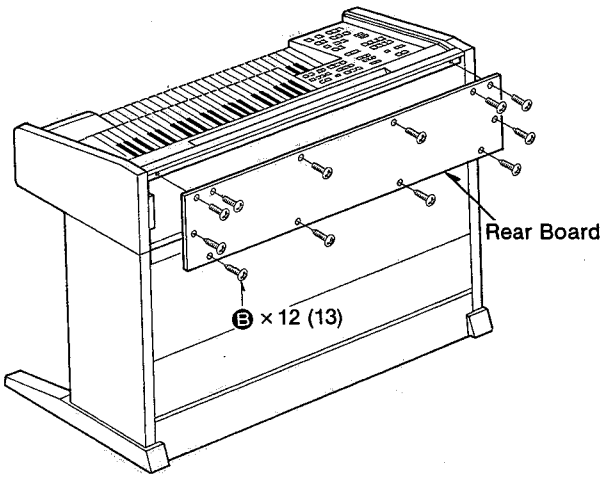

[Fig. 10]

3 Opening the Control Panel (Fig. 11)

① Remove the keyboard cover. (See step 1.)
② Remove the upper rear board. (See step 2.)
③ Remove the screws located on the bottom of the cabinet. (Ⓒ 9 pcs.)
④ Lift the control panel up. (AS shown by the arrow.)

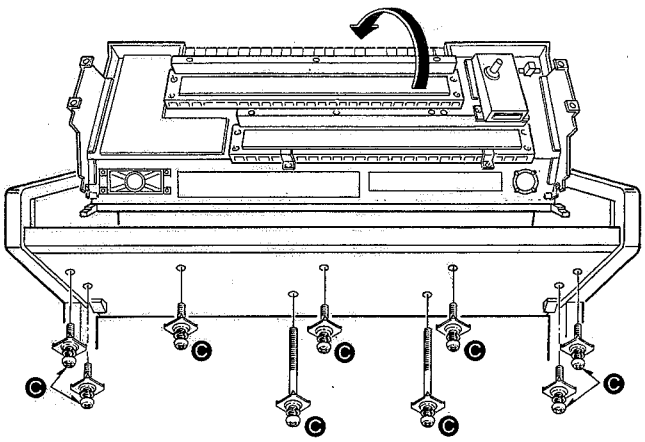

[Fig. 11]

4 Removing the Keyboard (Fig. 12)

① Remove the keyboard cover and upper rear board. (See step 1 and 2)
② Opening the control panel. (See step 3)
③ Remove the upper keyboard holding screws. (Ⓓ 9 pcs.)
④ Remvoe the lower keyboard holding screws. (Ⓔ 4 pcs.)

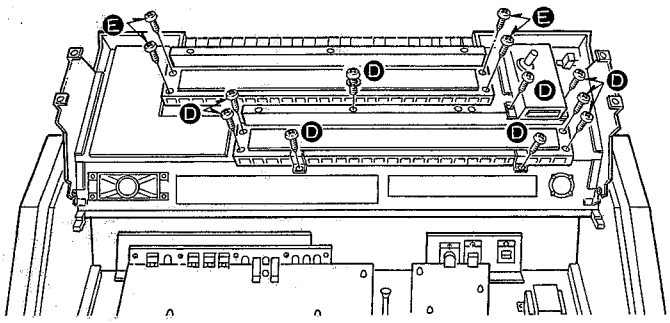

[Fig. 12]

5 Removing the Printed Circuit Board (Fig. 13)

① Remove the keyboard cover and upper rear board. (See step 1 and 2)
② Opening the control panel. (See step 3)
③ MAIN P.C.B.
- Remove the screws located on the rear accessory panel. (Ⓕ 4 pcs.)
- Remove the claws which inserted to the MAIN P.C.B. (Ⓖ 6 pcs.)

④ AS P.C.B. Ass'y
- Remove the screws located on the rear accessory panel. (Ⓗ 4 pcs. & Ⓘ 2 pcs.)
- Remove the claws which inserted to the AS P.C.B. Ass'y. (Ⓙ 3 pcs.)

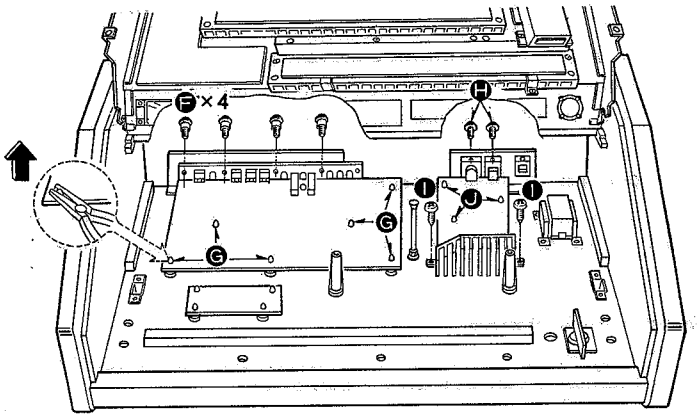

[Fig. 13]

6 Removing the Pedal Keyboard (Fig. 14)

① Remove the pedal keyboard holding screws. (Ⓚ 7 pcs.)

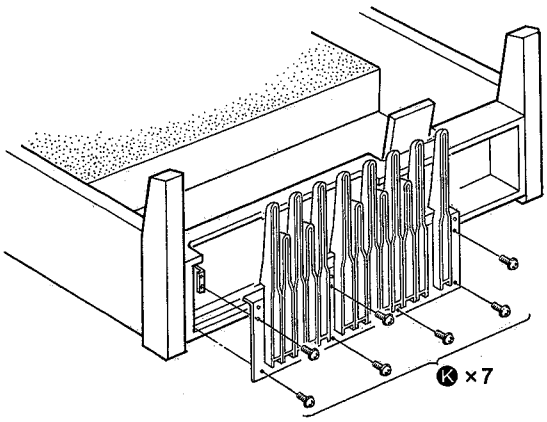

[Fig. 14]

7 Removing the Speaker (Fig. 15)

① Remove the rear board holding screws. (Ⓛ 11 pcs.)
② Remove the speaker mounting nuts. (Ⓜ 4 pcs.)

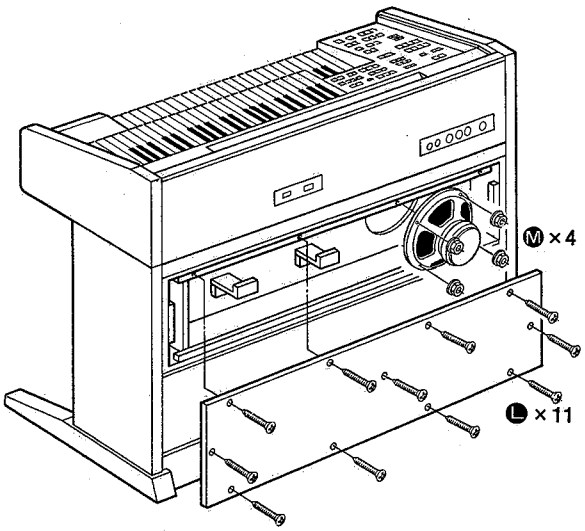

[Fig. 15]

PRECAUTIONS BEFORE SERVICING

■ Precautions for measuring of the output waveforms.

1. Please set the initial mode (factory-preset mode) before measurement.
2. After initial mode, set the measurement conditions as each check points.
3. The waveform was measured by "National Digital Storage Oscilloscope VP-5730A". Therefore the waveforms of musical tone signals shown may somewhat change due to variation of timing of triggering.
4. Since the 1/10 of the test probe is used, the indicated voltage value on bottom part of the each waveform photo is 1/10 of the actual value. (e.g. 0.2V/cm should be 2.0V/cm)

■ Important safety notice:

Components identified by ⚠ mark have special characteristics important for safety.
When replacing any of these components, use only manufacturer's specified parts.

■ Symbolic Marks

The symbolic marks for resistors and capacitors which are used in this circuits are classified as following TABLE-1 and TABLE-2.

1. RESISTORS
   - Resistors without symbolic mark are FIXED CARBON FILM RESISTORS (ERD-type).
   - All resistors are 1/4WATT, ±5% TOLERANCE unless otherwise designated in the schematic diagrams.

(TABLE-1)

SYMBOL	SPECIFICATION	SYMBOL	SPECIFICATION
Ⓕ	Fixed Carbon Film Resistors "FLAME-PROOF" (ERD—F—type)	Ⓕ	Fixed Metal Film Resistors "FLAME-PROOF" (ERX—type)
Ⓕ	Fixed Wire Wound Resistors "FLAME-PROOF" (ERF—type)	[F]	Fuse Type Fixed Metal Oxide Film Resistors "FLAME-PROOF" (ERQ—type)
Ⓕ	Fixed Metal Oxide Film Resistors "FLAME-PROOF" (ERG—type)	[F]	Fuse Type Fixed Carbon Film Resistors "FLAME-PROOF" (ERD2FC—type)
	Fixed Metal Film Resistors (Precision and High Stability) (ERO—type)		

2. CAPACITORS
   - Capacitors without symbolic mark are POLYESTER CAPACITORS. (ECQM-type, ECQG-type, ±10% Tolerance)
   - Polarized capacitors without symbolic mark are Aluminum Electrolytic Capacitors. (ECEA—type, ±20% Tolernace)

(TABLE-2)

SYMBOL	SPECIFICATION	TYPE
Ⓝ	Non-Polarised Electrolytic Capacitors	ECEA—N—type
Ⓨ	Non-Polarised Electrolytic (for Network System)	ECEA—Y—type
Ⓚ	Aluminum Electrolytic Capacitors (Miniature type)	ECEA—K—type ECEA—X—type
Ⓜ	Aluminum Electrolytic Capacitors (Low leakage current type)	ECEA—M—type
Ⓩ	Aluminum Electrolytic Capacitors (Low impeadance type)	ECEA—Z—type
TF	Metalized Plastic Film Capacitors (TF Series)	ECQV—type
	Polyester Film Capacitors	ECQB—type
○	Temperature Compensating Ceramic Capacitors	ECC—type
	High-Dielectric Constant Ceramic Capacitors	ECK—type
	High-Dielectric Constant Ceramic Capasitors	ECRR—type
	Ceramic Capacitors (Cylinder type)	ECBA—type
	Metalized Polyester Film Capacitors for Across the Line	ECQ—EW—type
	Aluminum Electrolytic Capacitors for smooting Circuit	ECES—type

SYMPTOMS WHICH APPEAR TO BE SIGNS OF TROUBLE

The following changes in performance may occur in the Technics organ but do not indicate trouble:

Phenomenon	Remedy
The buttons, keyboards, etc. malfunction.	■ Press the **FSC** button first to turn it on and then press the **INITIAL** key on the lower keyboard. •If the buttons, keyboards, etc. do not return to normal, turn the **POWER** switch off once, then turn on again.
Different voices are heard in the lower and upper half keys on the upper keyboard.	The lower portion of the upper keyboard is used to monitor the lower keyboard voices when the lower keyboard is required for programming functions.
A rhythm does not start or no rhythm sounds.	•No rhythm sounds if the **DRUMS VOLUME** buttons are turned off. •The rhythm does not start when you turn on a **PLAY SEQUENCER** button in which a tune with no rhythm is stored.
The glide control does not operate properly.	Any functional on and off operation other than the glide is storable in the foot switch.
The **TREMOLO** speed is improper.	The **TREMOLO** speed is adjustable. Adjust to your favorite speed.
The contents of the **PROGRAM CHORD COMPUTER**, **FULLBAND SETTING COMPUTER** etc. cannot be stored.	After pressing the **RECORD** button, press the necessary buttons within 5 seconds. The **RECORD** button turns off after a lapse of 5 seconds, making storage operation impossible. Press the **RECORD** button again.
When storing voices and effects in the **VOICE SETTING COMPUTER**, voices other than those desired are stored.	•To store voices and effects, press the **1~4** buttons of the **VOICE SETTING COMPUTER** while the **SET** button is held down. •To select your favorite registration from the 32 factory-preset voice combinations, press the **RECORD** button and depress one of the number buttons of the **VOICE SETTING COMPUTER** within 5 seconds. Then press **RHYTHM** button(s). Finally, press the selected number button again.
Storage is not possible with the **PROGRAM CHORD COMPUTER**.	•Check that the **PCC** indicator is slowly flashing. Pressing the **FINGERED** button turns off the **RECORD** button, making storage operation impossible. •Do not release the left hand (chord designation) before pressing the measure keys (, and).
The stored registration cannot be used when performance is started with the **PLAY SEQUENCER** button turned on.	To use the stored registration, turn on the **FSC** button and then press the **1** key on the lower keyboard.
The stored introduction is not reproduced during automatic performance.	•Set the beginning of a song, such as an introduction, before turning on the **RECORD** button. •To add an introduction after the **RECORD** indicator and **PLAY SEQUENCER** indicator flash, set it after turning on the **FSC** button. Then turn off the **FSC** button.
No storage is possible even when the **RECORD** indicator and **PLAY SEQUENCER** indicator are slowly flashing.	•No storage is possible when the **FSC** button is turned on. Turn it off before playing. •If another **PLAY SEQUENCER** indicator is lit, press the **START/STOP** button for automatic performance of the stored part. Another part can then be stored.

Phenomenon	Remedy
The quick rhythm tempo is delayed when the **PLAY SEQUENCER** is used.	This occurs when too many notes are played at one time. Slow down the tempo (to about ♩=180) or reduce the number of notes played at a time.
Different voices and effects are stored in the **FULLBAND SETTING COMPUTER** (**FSC**).	If the **VOICE SETTING COMPUTER** function is selected, the stored contents in this button are stored into the **FSC**. When the voices and effects selected by the **VOICE SETTING COMPUTER** are changed, store them in the **VOICE SETTING COMPUTER** again before storage in the **FSC**.
The cabinet becomes heated to some degree.	The Technics organ has a built-in power source that heats the cabinet to some degree. This is not an indication of trouble.

ERROR DISPLAY

When using the Digital Disk Recorder or the organ's internal memory and an error (Err) is indicated on the **MUSICAL DISPLAY**, the number following indicates the type of error.

Error No.	**Problem**	**Cause**
Nothing appears on the display.	The memory disk format is different (when recording).	The disk used is not a **NORMAL** mode or **PRO** mode disk. Initialize the disk.
1	The mode change function of the internal memory and the Digital Disk Recorder does not work.	•When Digital Disk Recorder is installated, the operation to change the internal memory mode (**FSC/PS**) is performed. •No memory disk is inserted. •The memory disk is write-protected.
2	Data transmission error when loading from or saving on a memory disk.	An error occurred during data transmission with the memory disk. Perform the loading or saving procedure once again.
3	Recording in or playing back from the organ's internal memory is unsuccessful.	The memory track number specified is not correct. Specify **1~5**.
5	Loading or saving on a memory disk is unsuccessful.	•The memory track number is not correct. In the **PRO** mode, specify **1**; in the **NORMAL** mode, specify **1~20**. •No memory disk is inserted. •The memory disk is write-protected (when recording).

MIDI INPLEMENTATION CHART

Technics Organ
[SX-EX15L/SX-EX25L/SX-EX35] **(Transmitted)**

Function...		upper	lower	bass	solo	Remarks
Basic Channel	Initialized Default Changed	1 1~16 1~16	2 1~16 1~16	3 1~16 1~16	4 1~16 1~16	memorized
Mode	Default Messages Altered	3 × ——	3 × ——	3 × ——	3 × ——	
Note Number	True voice	17~127 ——	5~120 ——	0~84 ——	17~127 ——	Including the use of Octave Shift
Velocity	Note ON Note OFF	× × (9nH:V=0)	× × (9nH:V=0)	× × (9nH:V=0)	× × (9nH:V=0)	
After Touch	Key's Ch's	× ×	× ×	× ×	× ×	
Pitch Bender		×	×	×	×	
Control Change	64	*○ ×	× (EX15) *○ × (EX25/EX35)	×	×	sustain
	94	*○ ×	*○ ×	×	×	celeste
Prog Change	True #	*○ × 0~ 8 (EX15) 0~15 (EX25/EX35)	*○ × 0~ 8 (EX15) 0~11 (EX25/EX35)	*○ × 0~2 (EX15) 0~7 (EX25/EX35)	*○ × 0~7 ——	
System Exclusive		×				
System Common	Song Pos Song Sel Tune	× ○ (EX15) *○ × (EX25/EX35) ×				
System Real Time	Clock Commands	○ *○ ×				
Aux Messages	Local ON/OFF All Notes OFF	× ○	× ○	× ○	× ○	
	Active Sense Reset	○ ×				

Notes *○ ×..... Whether or not the data for each of these items is transmitted can be set.

Mode 1: OMNI ON, POLY **Mode 2:** OMNI ON, MONO ○ : Yes
Mode 3: OMNI OFF, POLY **Mode 4:** OMNI OFF, MONO ×: No

Technics Organ
[SX-EX15L/SX-EX25L/SX-EX35] **(Recognized)**

Function...		upper	lower	bass	solo	Remarks
Basic Channel	Initialized Default Changed	1 1~16 1~16	2 1~16 1~16	3 1~16 1~16	4 1~16 1~16	memorized
Mode	Default Messages Altered	3 × ——	3 × ——	3 × ——	3 × ——	OMNI OFF POLY Mode
Note Number	True voice	0 ~127 **36~107 (EX15) 36~119	0~127 **36~107 (EX15) 36~119	0~127 **36~107	0~127 48~107	Changes depending on the position of the Transpose slide control or Octave Shift.
Velocity	Note ON Note OFF	× × (9nH:V=0)	× × (9nH:V=0)	× × (9nH:V=0)	× × (9nH:V=0)	
After Touch	Key's Ch's	× ×	× ×	× ×	× ×	
Pitch Bender		×	×	×	×	
Control Change	64	*○ ×	× (EX15) *○ × (EX25/EX35)	×	×	sustain
	94	*○ ×	*○ ×	×	×	celeste
Prog Change	True #	*○ × 0~8 (EX15) 0~3 (EX25) 0~6 (EX35)	*○ × (EX15) × (EX25/EX35) 0~8 (EX15)	*○ × 0~2 (EX15) 0~7 (EX25/EX35)	*○ × 0~7	
System Exclusive		×				
System Common	Song Pos Song Sel Tune	× × (EX15) ○* × (EX25/EX35) ×				
System Real Time	Clock Commands	○ *○ ×				
Aux Messages	Local ON/OFF All Notes OFF	× ○	× ○	× ○	× ○	(123~127)
	Active Sense Reset	○ ×				

Notes *○ ×..... Whether or not the data for each of these items is received can be set.
**Changes depending on the selected voice.

Mode 1: OMNI ON, POLY **Mode 2:** OMNI ON, MONO ○ : Yes
Mode 3: OMNI OFF, POLY **Mode 4:** OMNI OFF, MONO ×: No

- This product adheres to MIDI specifications as published by the Japan MIDI Association.

WIRING CONNECTION DIAGRAM

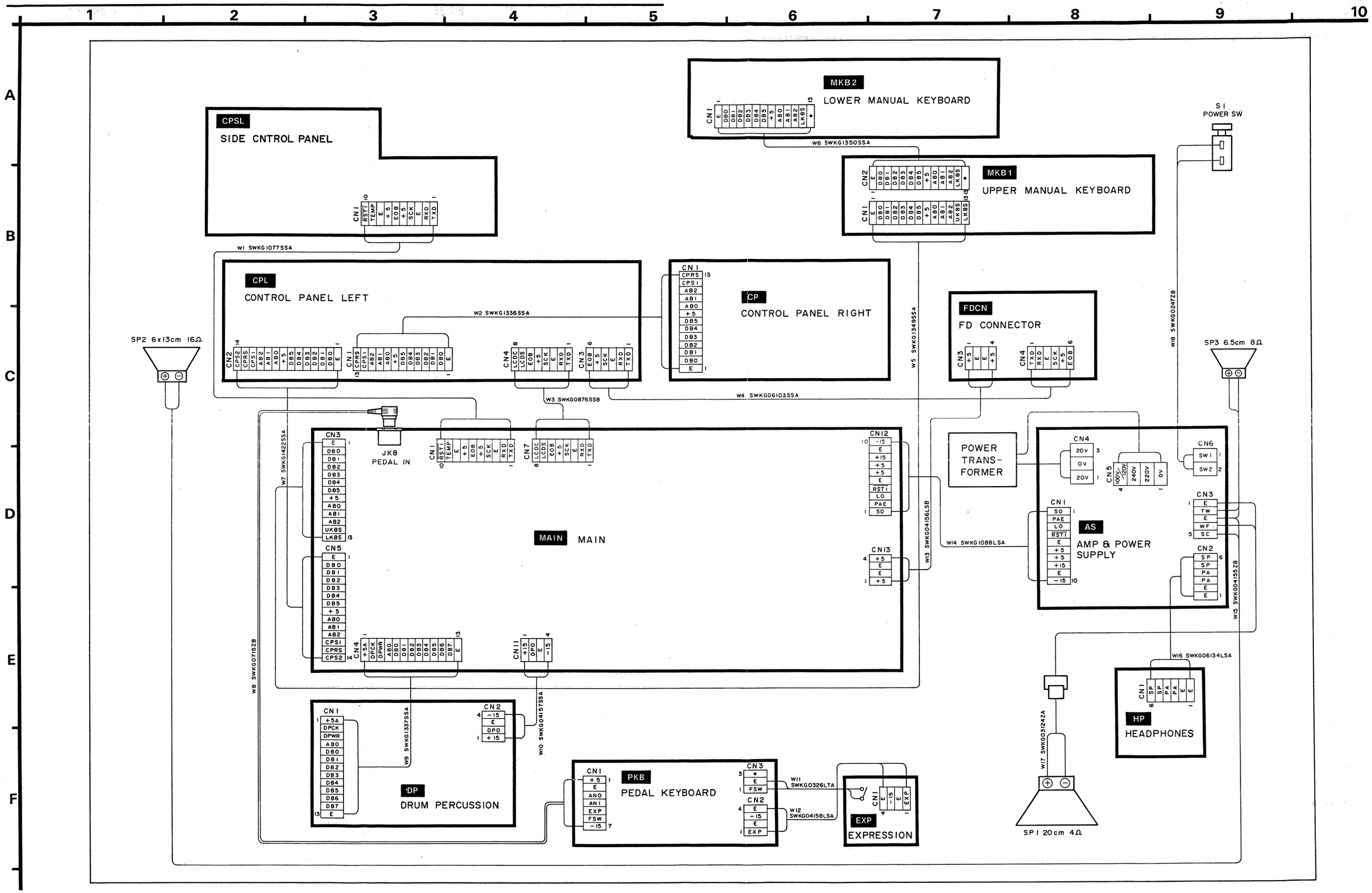

BLOCK DIAGRAM

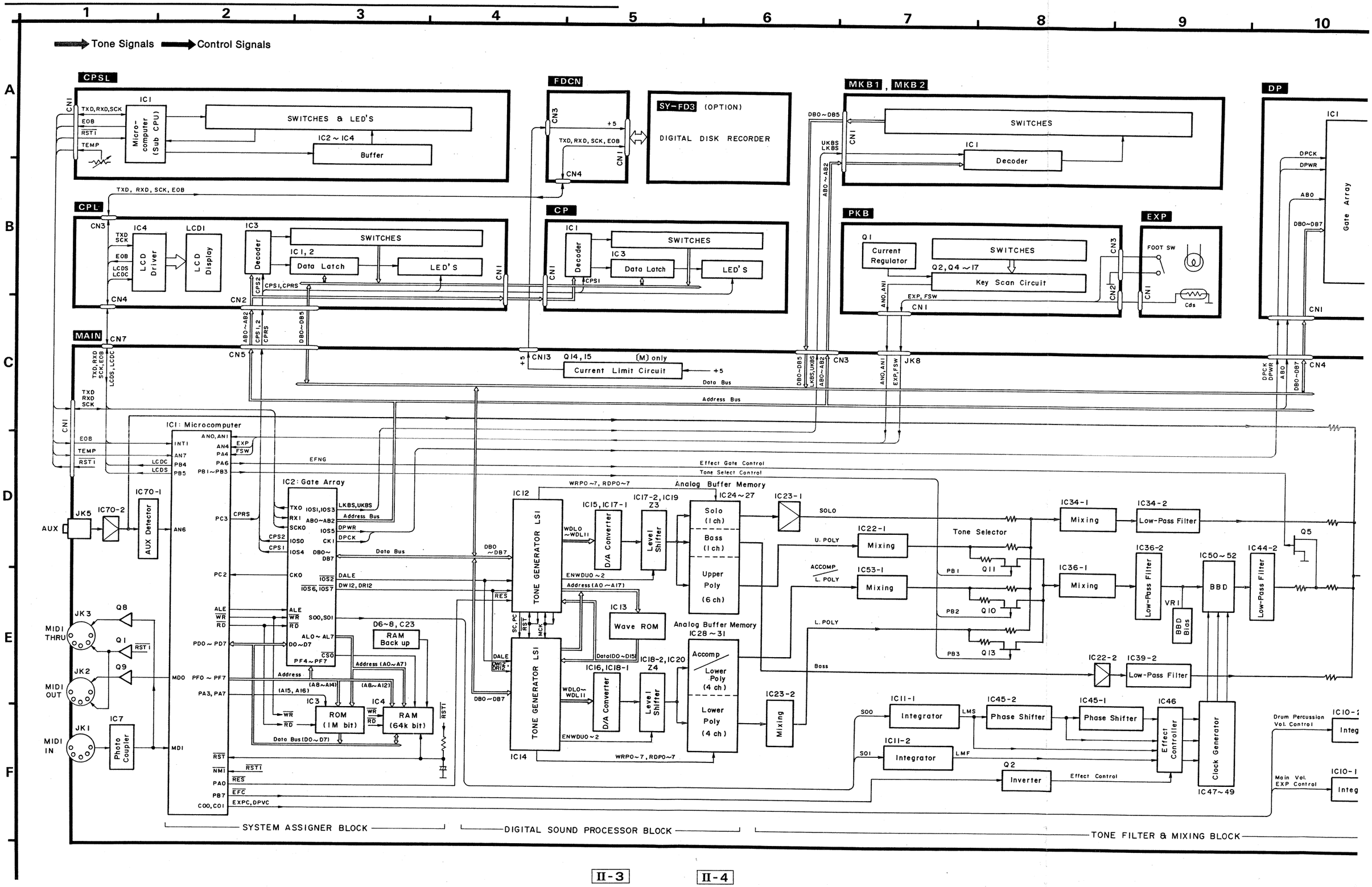

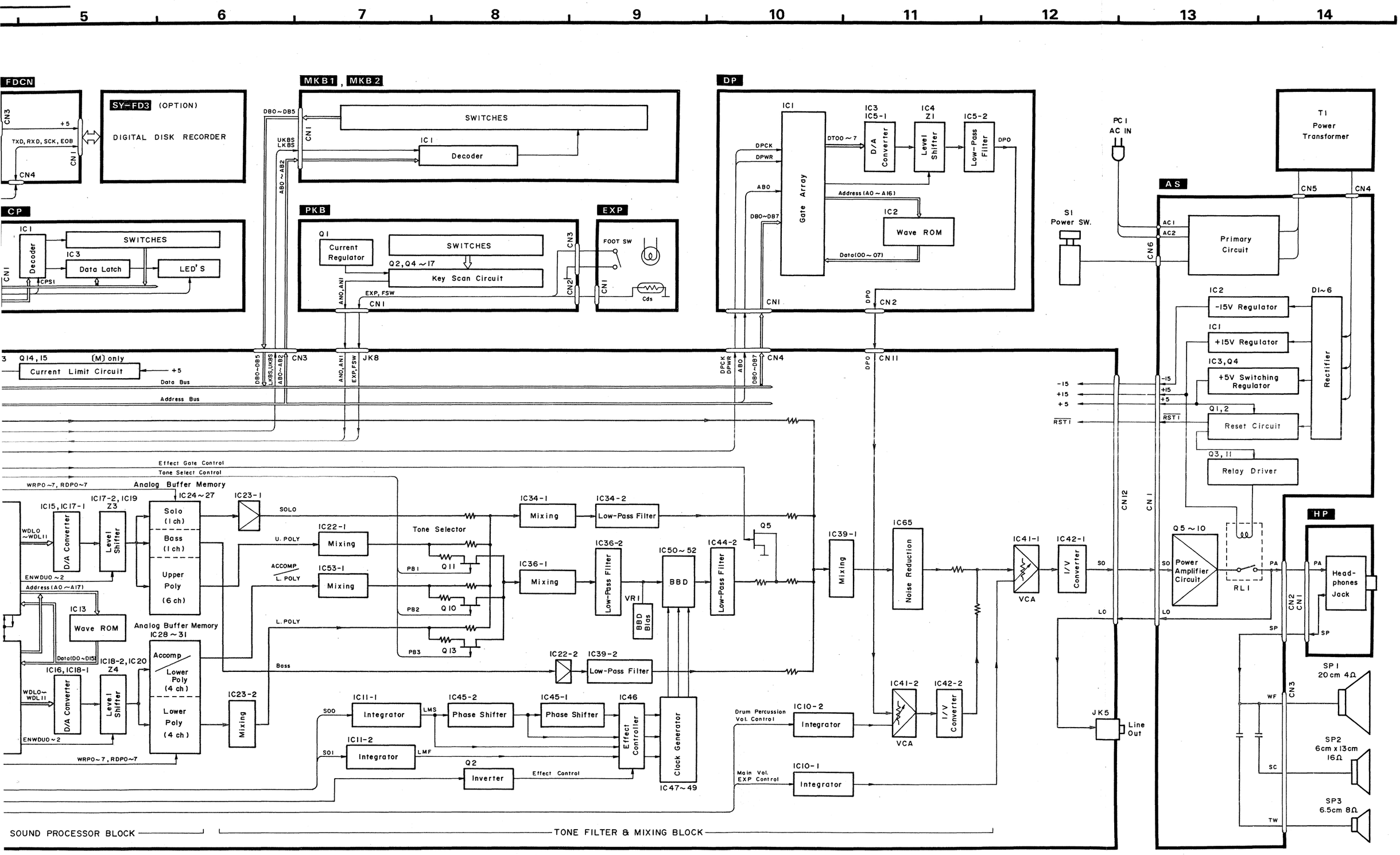
5
6
7
8
9
10
11
12
13
14
FDCN
CN3
+5
TXD, RXD, SCK, EOB
CN1
CN4
SY-FD3 (OPTION)
DIGITAL DISK RECORDER
MKB1, MKB2
DB0~DB5
SWITCHES
IC1
Decoder
UKBS
LKBS
CN1
AB0~AB2
DP
IC1
Gate Array
DPCK
DPWR
AB0
DB0~DB7
CN1
IC3
IC5-1
D/A Converter
DT00~7
IC4
Z1
Level Shifter
IC5-2
Low-Pass Filter
DPO
Address (A0~A16)
IC2
Wave ROM
Data(00~07)
DPO
CN2
PC1
AC IN
T1
Power Transformer
AS
CN5
CN4
S1
Power SW.
CN6
AC1
AC2
Primary Circuit
IC2
-15V Regulator
D1~6
IC1
+15V Regulator
Rectifier
IC3,Q4
+5V Switching Regulator
Q1,2
Reset Circuit
Q3,11
Relay Driver
-15
+15
+5
RST1
CN12
CN1
CP
IC1
Decoder
SWITCHES
IC3
Data Latch
LED'S
CPS1
PKB
Q1
Current Regulator
SWITCHES
Q2,Q4~17
Key Scan Circuit
ANO,ANI
EXP,FSW
CN1
CN3
CN2
EXP
FOOT SW
CN1
Cds
Q14,15 (M) only
Current Limit Circuit
+5
Data Bus
Address Bus
CN3
JK8
CN4
CN11
Effect Gate Control
Tone Select Control
WRPO~7, RDPO~7
Analog Buffer Memory
IC24~27
IC15, IC17-1
IC17-2, IC19
Z3
D/A Converter
Level Shifter
WDLO ~WDL11
ENWDUO~2
Solo (1ch)
Bass (1ch)
Upper Poly (6ch)
IC23-1
SOLO
U. POLY
IC22-1
Mixing
ACCOMP
L. POLY
IC53-1
Mixing
Tone Selector
PB1
Q11
PB2
Q10
PB3
Q13
IC34-1
Mixing
IC34-2
Low-Pass Filter
IC36-1
Mixing
IC36-2
Low-Pass Filter
VR1
BBD Bias
IC50~52
BBD
IC44-2
Low-Pass Filter
Q5
IC39-1
Mixing
IC65
Noise Reduction
IC41-1
VCA
IC42-1
I/V Converter
SO
LO
Q5~10
Power Amplifier Circuit
RL1
PA
SP
HP
Head-phones Jack
CN2
CN1
SP1
20cm 4Ω
WF
CN3
SP2
6cm x 13cm
16Ω
SC
SP3
6.5cm 8Ω
TW
Address (A0~A17)
IC13
Wave ROM
Data(D0~D15)
Analog Buffer Memory
IC28~31
Accomp
Lower Poly (4ch)
Lower Poly (4ch)
IC16, IC18-1
IC18-2, IC20
Z4
Bass
IC22-2
IC39-2
Low-Pass Filter
IC23-2
Mixing
SOO
SOI
IC11-1
Integrator
IC11-2
Integrator
LMS
LMF
IC45-2
Phase Shifter
IC45-1
Phase Shifter
IC46
Effect Controller
Q2
Inverter
Effect Control
IC47~49
Clock Generator
Drum Percussion Vol. Control
IC10-2
Integrator
Main Vol. EXP Control
IC10-1
Integrator
IC41-2
VCA
IC42-2
I/V Converter
JK5
Line Out
SOUND PROCESSOR BLOCK
TONE FILTER & MIXING BLOCK

MAIN, FD CONNECTOR CIRCUIT BOARD

❶, ❷

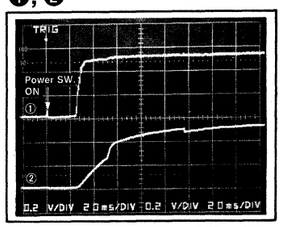

• Power SW. .....OFF → ON

❶, ❷

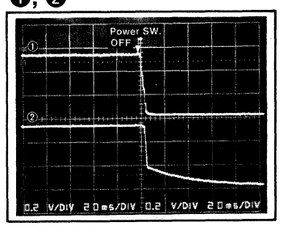

• Power SW. .....ON → OFF

❶, ❸

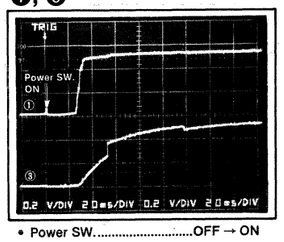

• Power SW. .....OFF → ON

❶, ❸

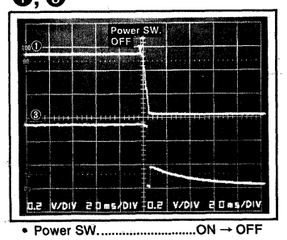

• Power SW. .....ON → OFF

MAIN MAIN CIRCUIT BOARD

NOTE: Resistor marked JR on the printed circuit board are the impedance "ZERO ohm" resistors as the same as jumper wires.

∗P.C.B. Comparison chart by area.

Area	P.C.B. No.	C4, 5	L3
M	SXPG144641	×	
MC, EZ, XL	SXPG144651	×	
Others	SXPG144621	○	

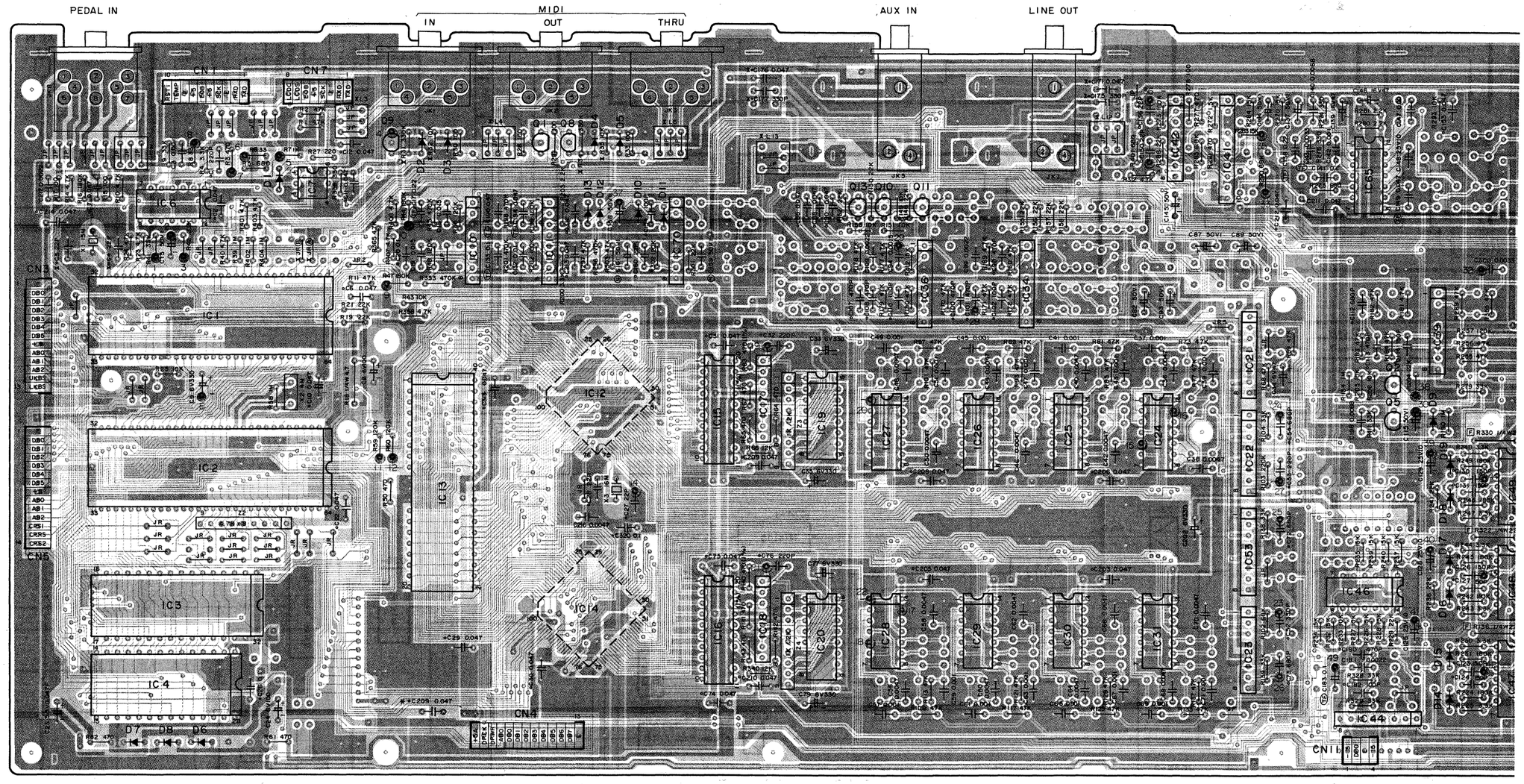

BOARD

5 6 7 8 9 10 11 12 13 14

the printed circuit board are the impedance
as the same as jumper wires.

*P.C.B. Comparison chart by area.

Area	P.C.B. No.	C4, 5	L3~5, 11~13, C171, 175~177, 209	Q14, 15, R346~350, C199	JR8	JR A	JR B
M	SXPG144641	×	○	○	×	×	○
MC, EZ, XL	SXPG144651	×	○	×	○	○	×
Others	SXPG144621	○	×	×	○	○	×

*Products for (EZ), (MC) and (XL) areas.

SXPG144651

*Products for (M) area.

SXPG144641

*Other areas.

SXPG144621

Circuit view on top of P.C.B.

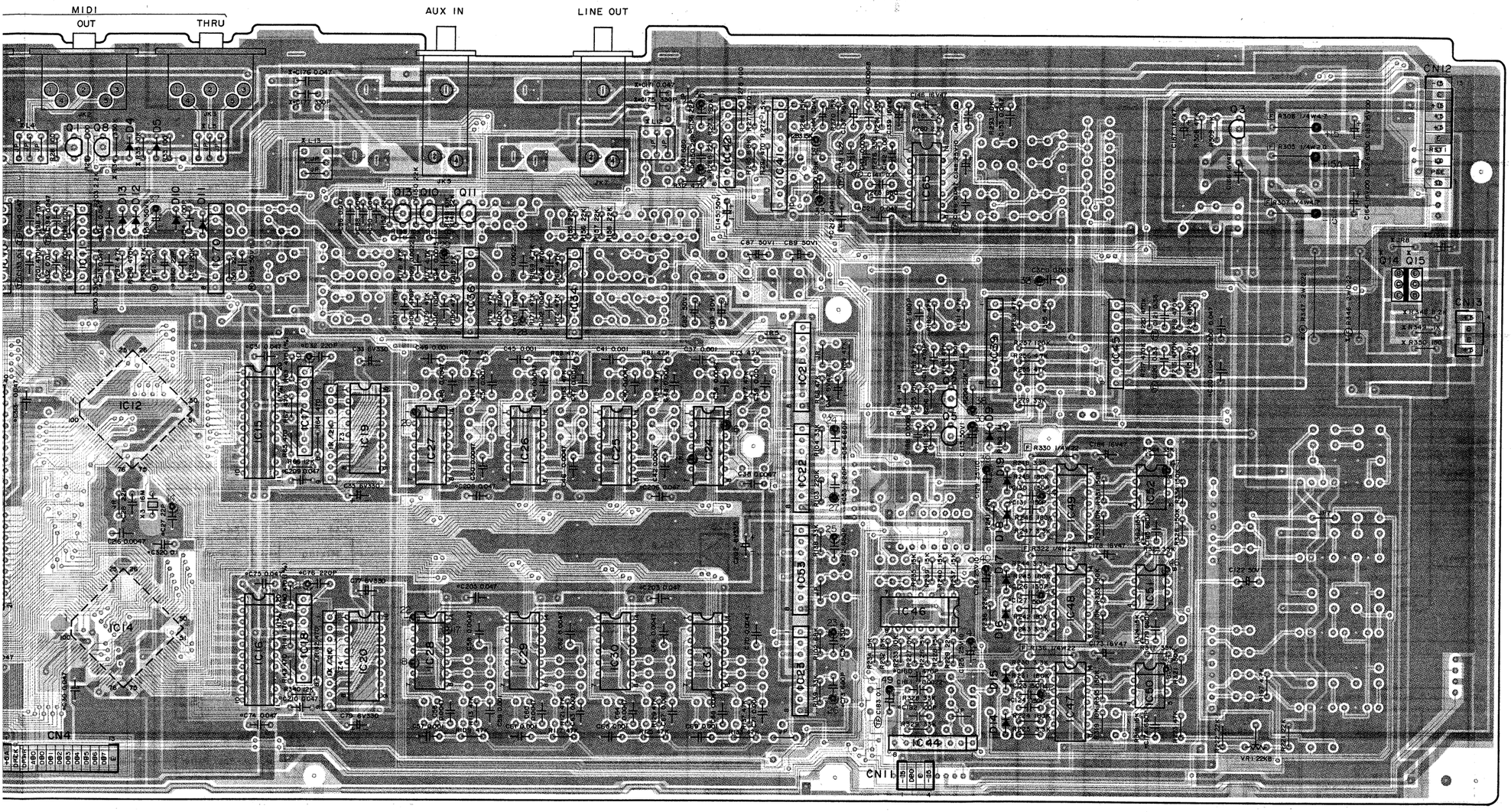

SXPG141931

FDCN

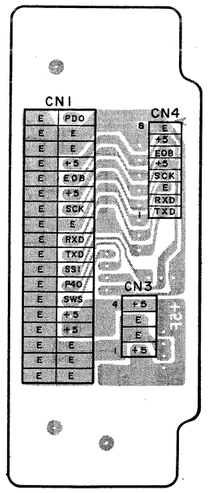

B

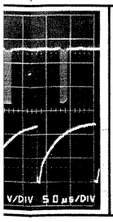

❾ Main Vol.,EXP Control

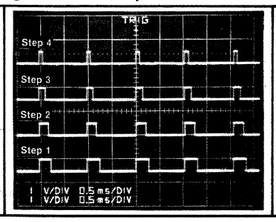

❿ Rhythem Vol. Control

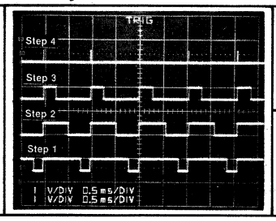

⓫, ⓬

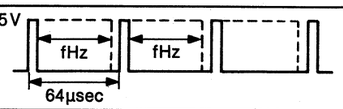

- Tremolo Fast 6.5Hz
- Tremolo Slow..... 0.5Hz
- Celeste 0.5Hz

- Tremolo Fast 20Hz
- Tremolo Slow..... 1Hz

⓮ 16MHz

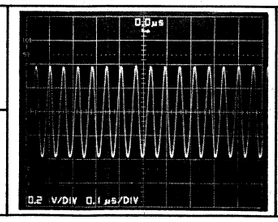

⓯ RDP0, ⓰ WRP0

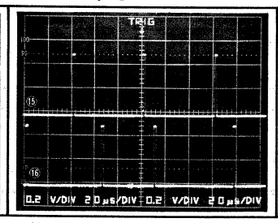

⓱ WRP0, ⓲ RDP0

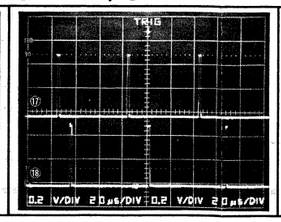

⓳, ⓴

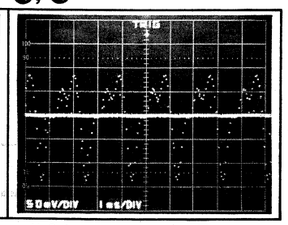

II-7

- Exp Pedal .....Max.
- Main Vol. .....Step 1~4
- Upper key .....ON

- Drums Vol. .....Step 1~4
- Rhythm .....Start

II-8

- Upper key .....C4 ON

- Rhythm .....Start
- Lower key C

- U. Solo .....Flute
- Solo Vol. .....Max.
- Upper key C3

㉑, ㉒

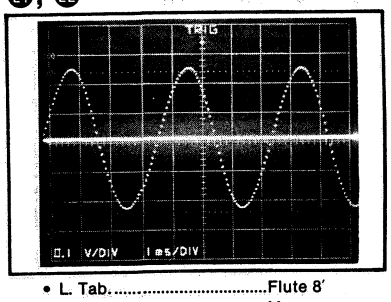

- L. Tab. ..... Flute 8′
- L. Poly Vol. ..... Max.
- Lower key C3

㉓ Solo

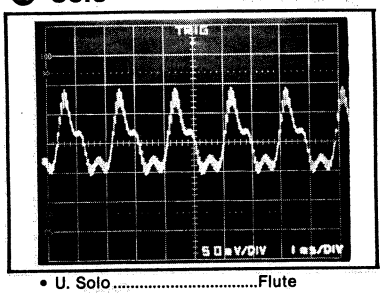

- U. Solo ..... Flute
- Upper key C4
- Solo Vol. ..... Max.

㉔ Upper Poly

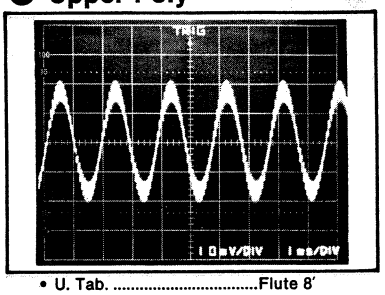

- U. Tab. ..... Flute 8′
- U. Poly Vol. ..... Max.
- Upper key C4

㉕ Accomp

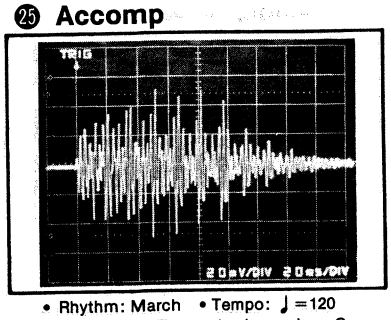

- Rhythm: March • Tempo: ♩=120
- Play Mode: Fingered • Lower key: C
- Accomp: 1/2 ON • Accomp Vol.: Max.

㉖ Lower Poly

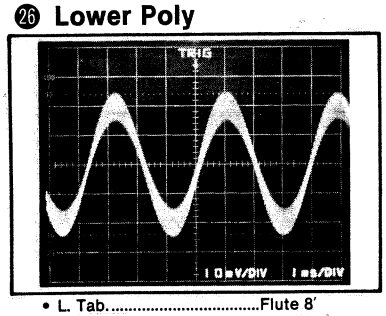

- L. Tab. ..... Flute 8′
- L. Poly Vol. ..... Max.
- Lower key C3

㉗ Bass

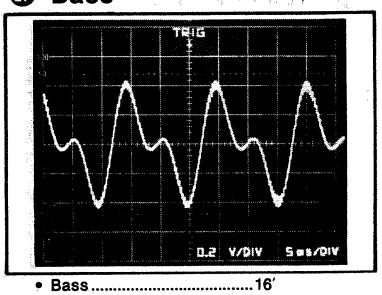

- Bass ..... 16′
- Bass key C2
- Bass Vol. ..... Max.

㉘

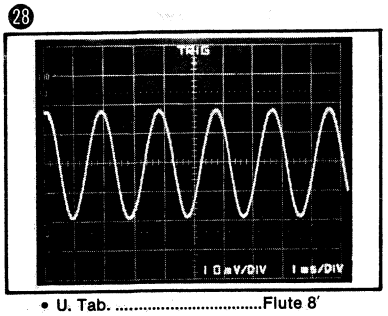

- U. Tab. ..... Flute 8′
- U. Poly Vol. ..... Max.
- Upper key C4

㉙

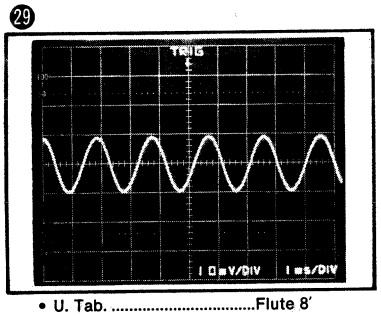

- U. Tab. ..... Flute 8′
- U. Poly Vol. ..... Max.
- Upper key C4
- U. Tab. Effect ..... Celeste

㉚ EFNG

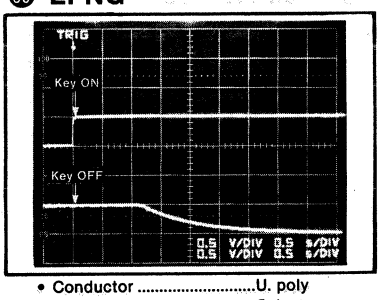

- Conductor ..... U. poly
- U. Tab. Effect ..... Celeste
- Upper key ..... ON → OFF
  OFF → ON

㉜

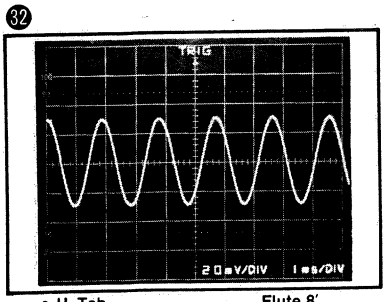

- U. Tab. ..... Flute 8′
- U. Poly Vol. ..... Max.
- Upper key: C4 • Effect: OFF

㉝ Drums Vol. Control

- Drums Volume
  - Step 1 ..... −10.8V
  - Step 2 ..... −7.0V
  - Step 3 ..... −3.5V
  - Step 4 ..... −0V

㉞ Drum Percussion

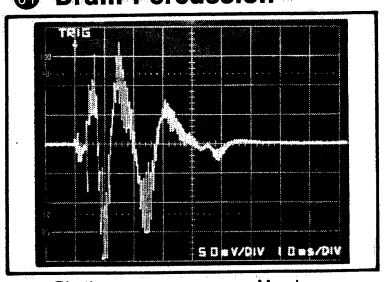

- Rhythm ..... March
- Tempo ..... ♩=120
- Drums Vol. ..... Max.

㉟ Main Vol., EXP Control

- Main Volume
  - Step 1 ..... −3.8V
  - Step 2 ..... −3.0V
  - Step 3 ..... −2.2V
  - Step 4 ..... −1.4V

- EXP Pedal ..... Max.
- Main Vol. ..... Step 1~4
- Upper key ..... ON

㊱

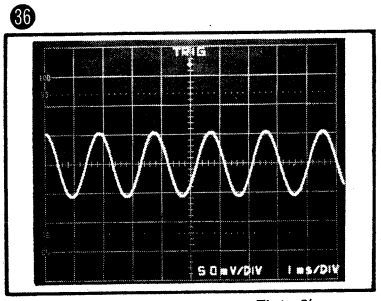

- U. Tab. ..... Flute 8′
- U. Poly Vol. Main Vol.: Max.
- EXP Pedal: Max. • Upper key: C4

㊲

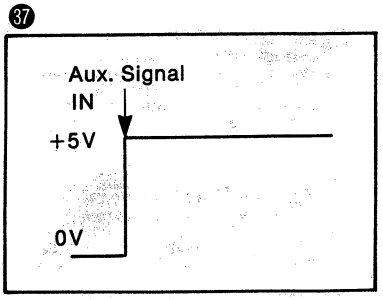

㊳

- Effect
  Celeste..... 0V
  Tremolo..... +15V

㊴ **Celeste**

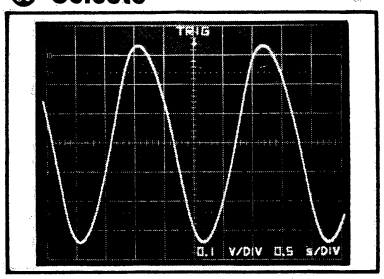

- Effect .....Celeste

㊴ **Tremolo Slow**

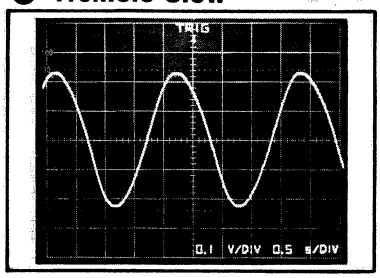

- Effect .....Tremolo Slow

㊴ **Tremolo Fast**

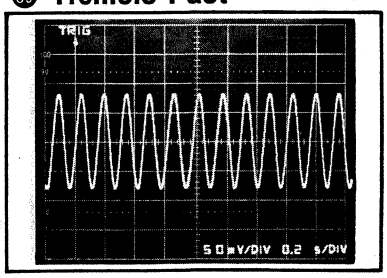

- Effect .....Tremolo Fast

㊵ **Celeste**

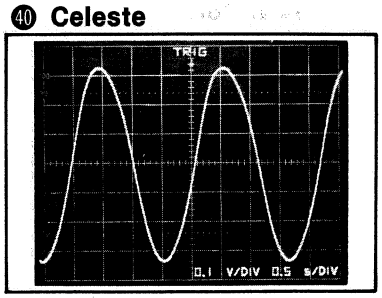

- Effect .....Celeste

㊵ **Tremolo Slow**

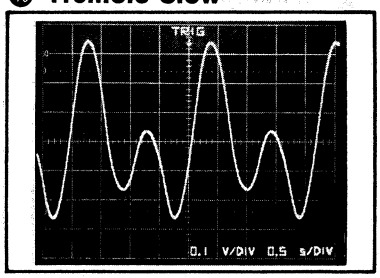

- Effect .....Tremolo Slow

㊵ **Tremolo Fast**

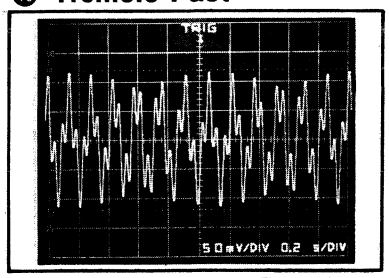

- Effect .....Tremolo Fast

㊶ **Celeste**

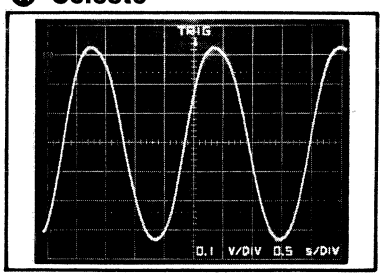

- Effect .....Celeste

㊶ **Tremolo Slow**

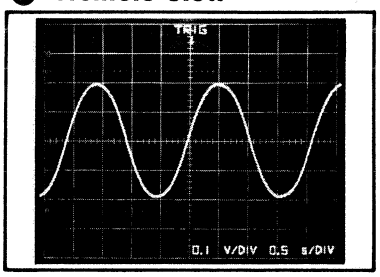

- Effect .....Tremolo Slow

㊶ **Tremolo Fast**

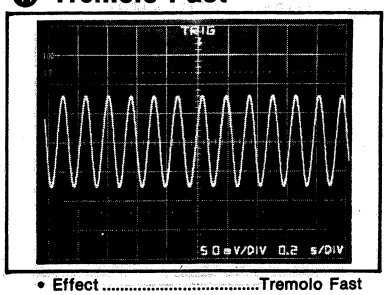

- Effect .....Tremolo Fast

㊷, ㊸, ㊹

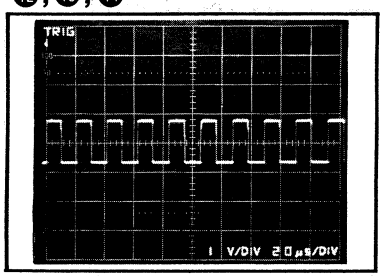

- Effect .....Celeste

㊺, ㊻, ㊼

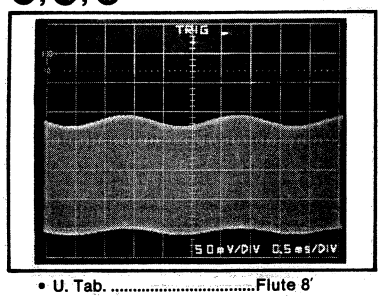

- U. Tab. .....Flute 8′
- U. Poly Vol.....Max.
- Upper key C4
- U. Tab. Effect.....Celeste

㊽

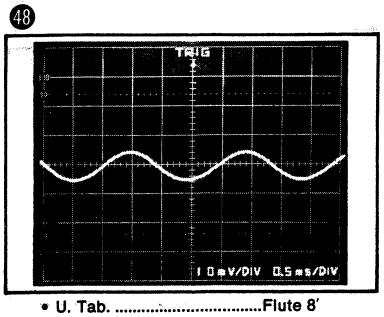

- U. Tab. .....Flute 8′
- U. Poly Vol.....Max.
- Upper key C4
- U. Tab. Effect.....Celeste

MAIN, FD CONNECTOR CIRCUIT DIAGRAM

MAIN MAIN CIRCUIT

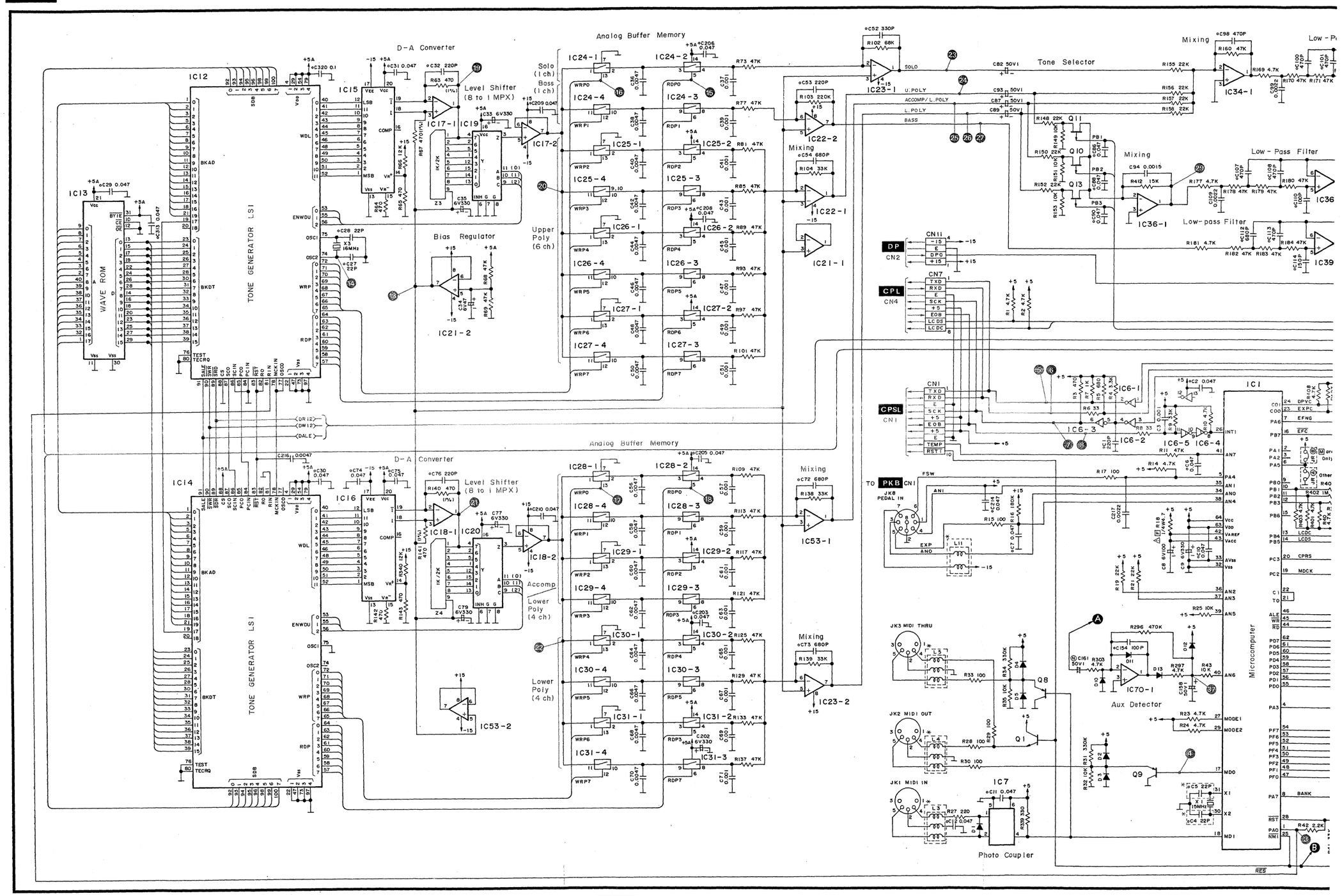

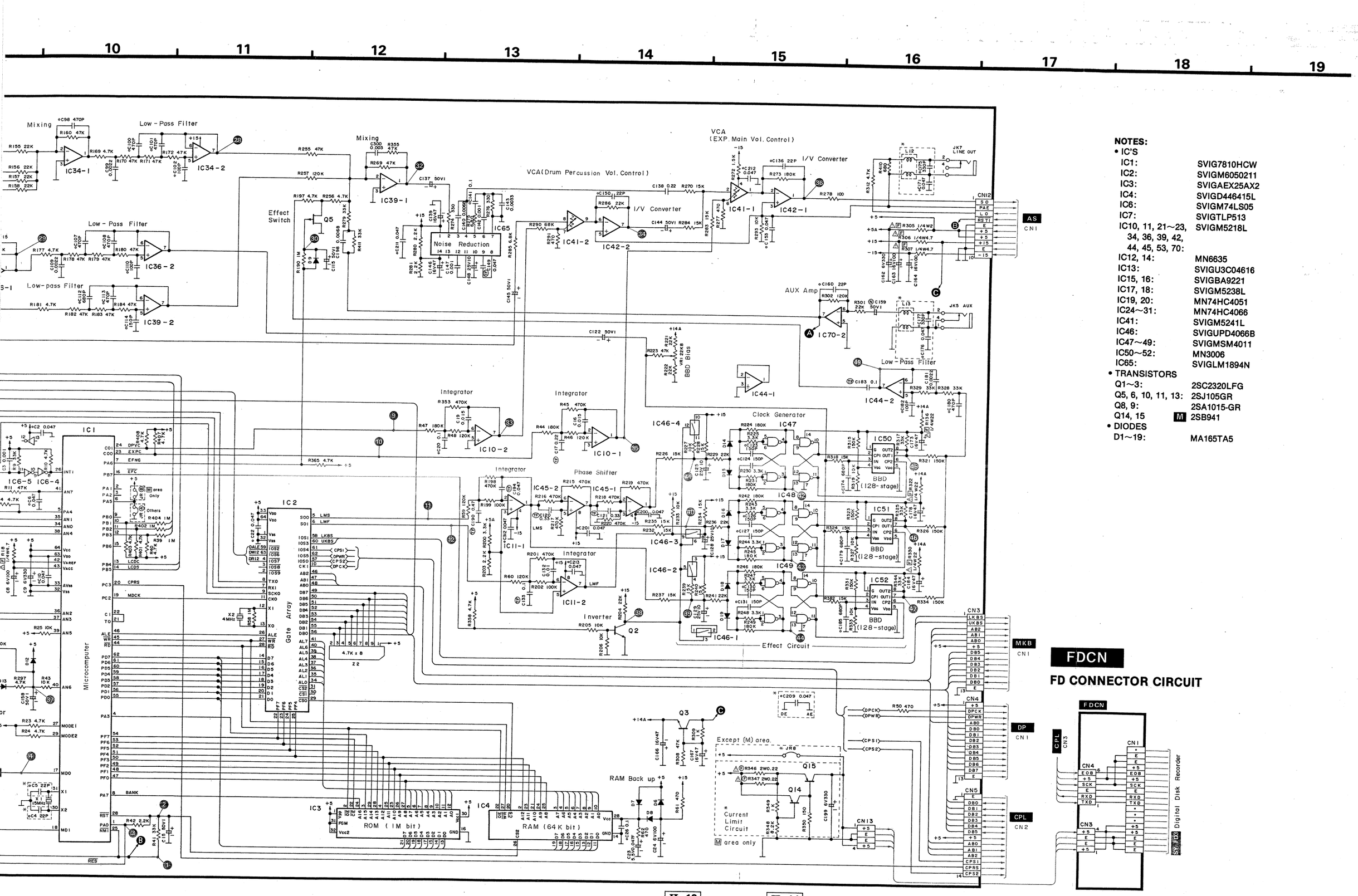

NOTES:

- IC'S

IC1:	SVIG7810HCW
IC2:	SVIGM6050211
IC3:	SVIGAEX25AX2
IC4:	SVIGD446415L
IC6:	SVIGM74LS05
IC7:	SVIGTLP513
IC10, 11, 21~23, 34, 36, 39, 42, 44, 45, 53, 70:	SVIGM5218L
IC12, 14:	MN6635
IC13:	SVIGU3C04616
IC15, 16:	SVIGBA9221
IC17, 18:	SVIGM5238L
IC19, 20:	MN74HC4051
IC24~31:	MN74HC4066
IC41:	SVIGM5241L
IC46:	SVIGUPD4066B
IC47~49:	SVIGMSM4011
IC50~52:	MN3006
IC65:	SVIGLM1894N

- TRANSISTORS

Q1~3:	2SC2320LFG
Q5, 6, 10, 11, 13:	2SJ105GR
Q8, 9:	2SA1015-GR
Q14, 15 M	2SB941

- DIODES

D1~19:	MA165TA5

FDCN

FD CONNECTOR CIRCUIT

SIDE CONTROL PANEL CIRCUIT BOARD

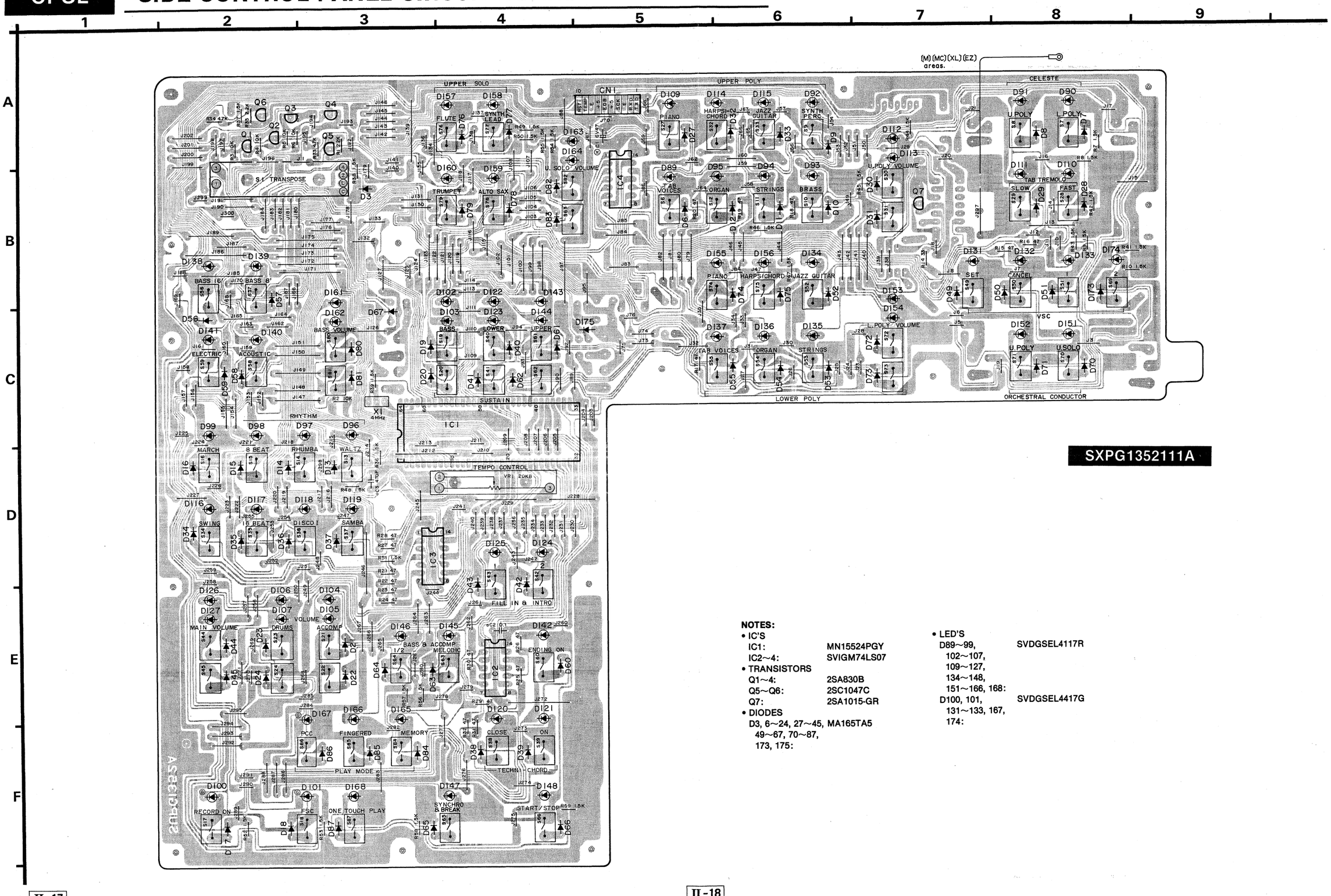

NOTES:

- IC'S
  - IC1: MN15524PGY
  - IC2~4: SVIGM74LS07
- TRANSISTORS
  - Q1~4: 2SA830B
  - Q5~Q6: 2SC1047C
  - Q7: 2SA1015-GR
- DIODES
  - D3, 6~24, 27~45, 49~67, 70~87, 173, 175: MA165TA5
- LED'S
  - D89~99, 102~107, 109~127, 134~148, 151~166, 168: SVDGSEL4117R
  - D100, 101, 131~133, 167, 174: SVDGSEL4417G

SIDE CONTROL PANEL CIRCUIT DIAGRAM

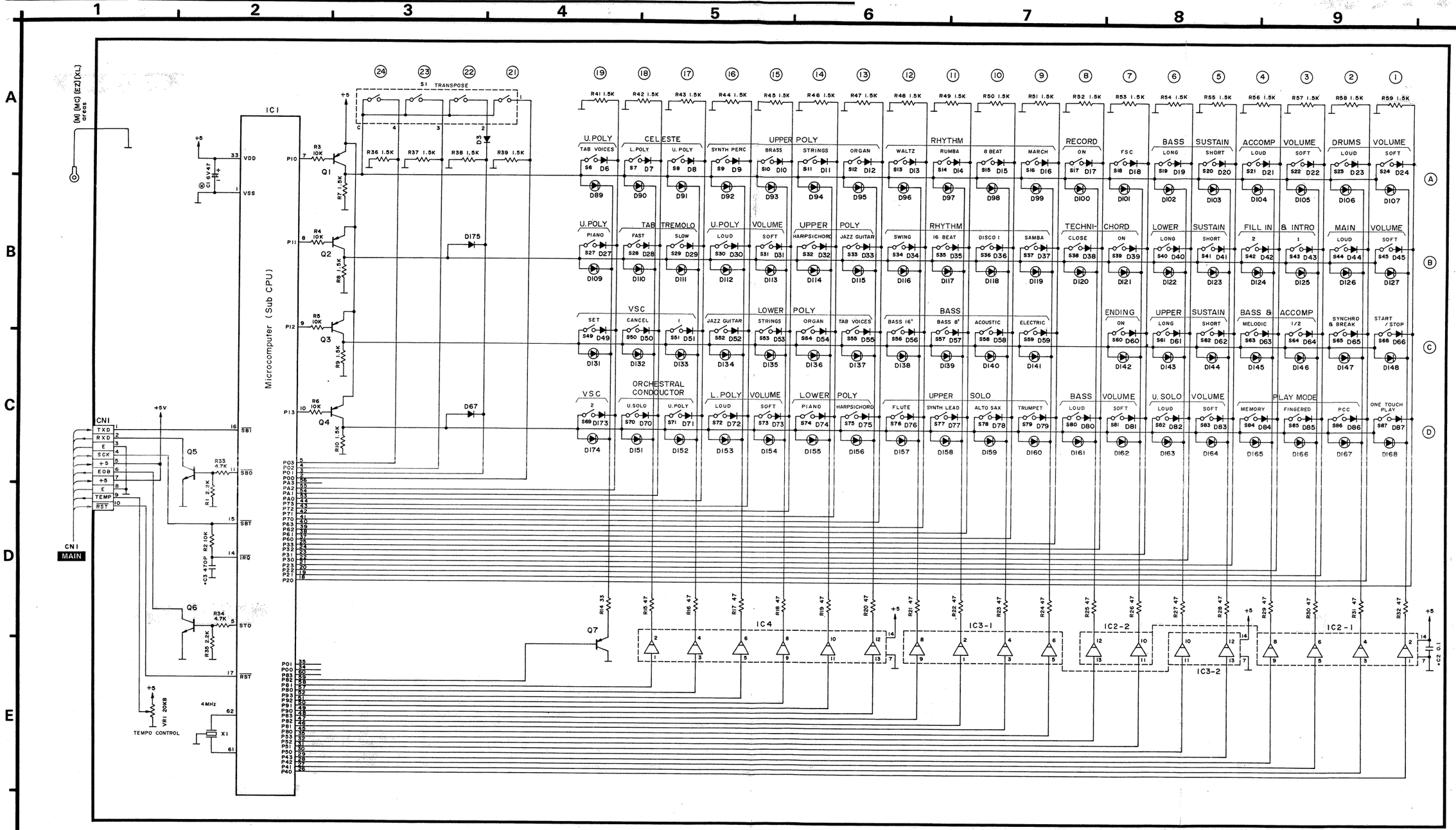

NOTES:

- IC'S
  - IC1: MN15524PGY
  - IC2~4: SVIGM74LS07
- TRANSISTORS
  - Q1~4: 2SA830B
  - Q5~Q6: 2SC1047C
  - Q7: 2SA1015-GR
- DIODES
  - D3, 6~24, 27~45, 49~67, 70~87, 173, 175: MA165TA5
- LED'S
  - D89~99, 102~107, 109~127, 134~148, 151~166, 168: SVDGSEL4117R
  - D100, 101, 131~133, 167, 174: SVDGSEL4417G

CONTROL PANEL LEFT, RIGHT CIRCUIT BOARD

CPL CONTROL PANEL LEFT

SXPG144911

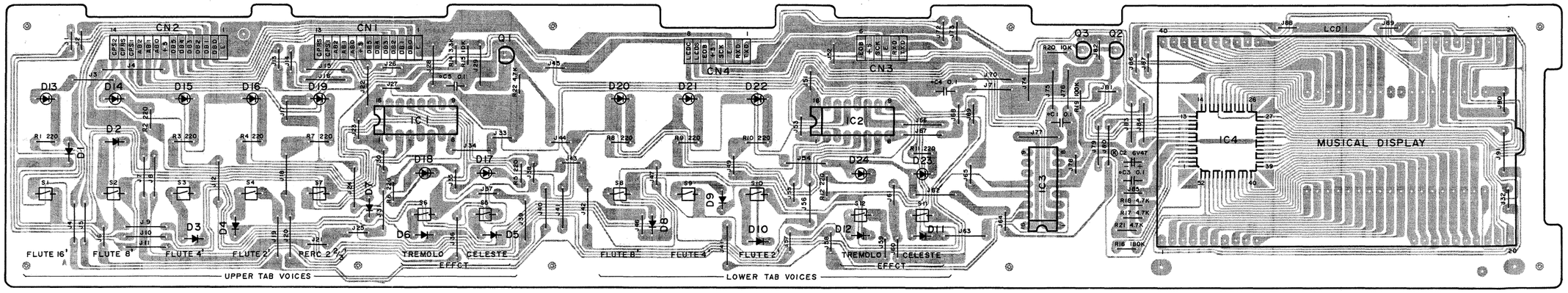

CPL NOTES:

- IC'S
  - IC1, 2: SVIGM74LS174
  - IC3: SVIGM74LS138
  - IC4: SVIGUPD7225
- TRANSISTORS
  - Q1: 2SA1015-GR
  - Q2, 3: 2SC2320LFG
- DIODES
  - D1~12: MA165TA5
  - D13~24: SVDGSEL4117R

CP CONTROL PANEL RIGHT

SXPG135331

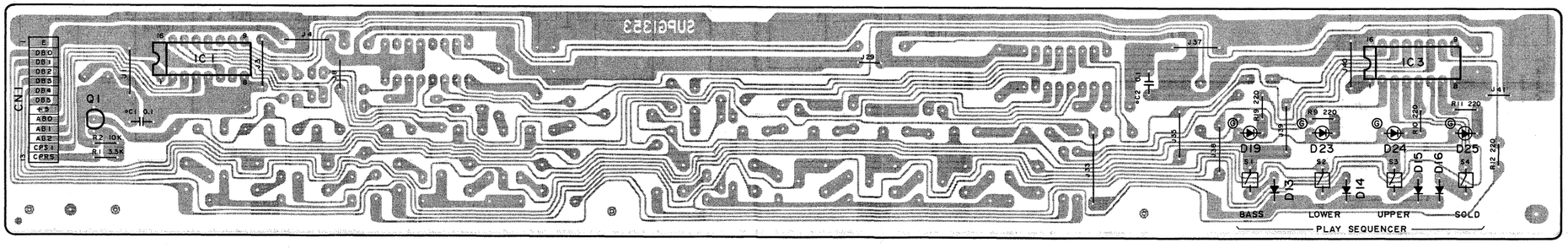

CP NOTES:

- IC'S
  - IC1: SVIGM74LS138
  - IC3: SVIGM74LS174
- TRANSISTOR
  - Q1: 2SA1015-GR
- DIODES
  - D13~16: MA165TA5
  - D19, 23~25: SVDGSEL4417G

CONTROL PANEL LEFT, RIGHT CIRCUIT DIAGRAM

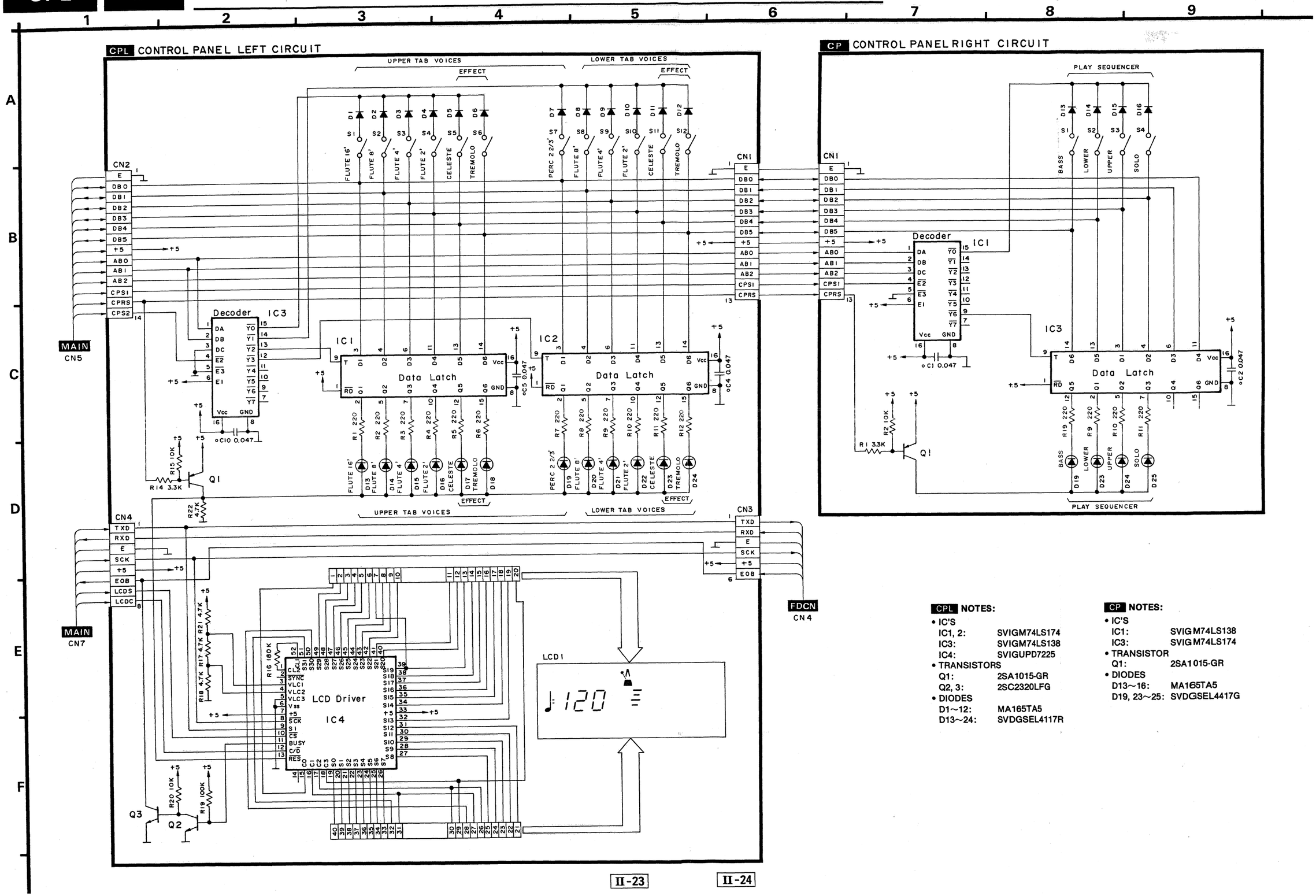

CPL NOTES:

- IC'S
  - IC1, 2: SVIGM74LS174
  - IC3: SVIGM74LS138
  - IC4: SVIGUPD7225
- TRANSISTORS
  - Q1: 2SA1015-GR
  - Q2, 3: 2SC2320LFG
- DIODES
  - D1~12: MA165TA5
  - D13~24: SVDGSEL4117R

CP NOTES:

- IC'S
  - IC1: SVIGM74LS138
  - IC3: SVIGM74LS174
- TRANSISTOR
  - Q1: 2SA1015-GR
- DIODES
  - D13~16: MA165TA5
  - D19, 23~25: SVDGSEL4417G

AMP & POWER SUPPLY, HEADPHONES CIRCUIT DIAGRAM

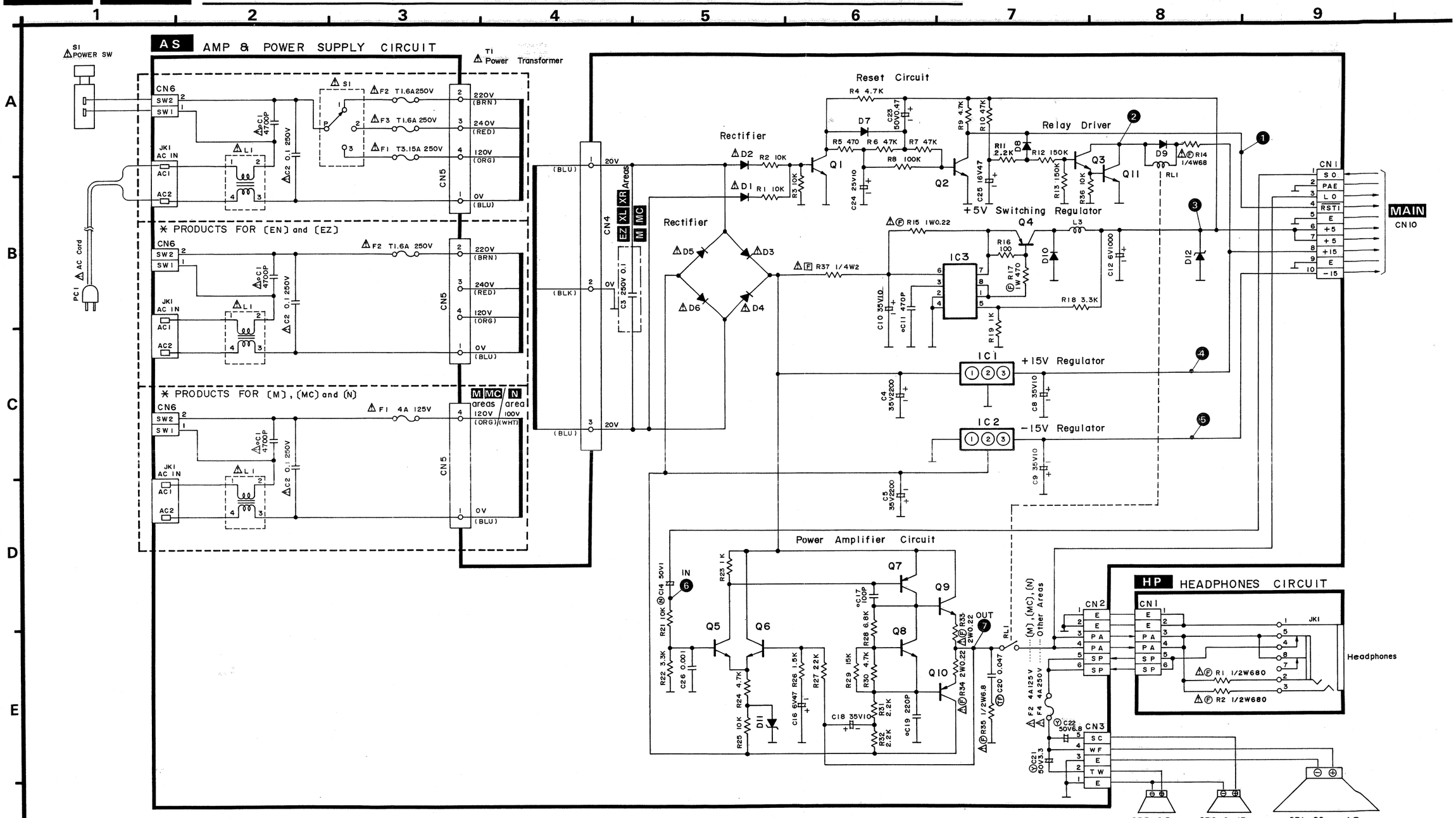

NOTES:

- IC'S
  - IC1: SVIGM5F7815
  - IC2: SVIGM5F7915
  - IC3: SVIGM5291P
- TRANSISTORS
  - Q1~3, 5, 6, 11: 2SC2320LFG
  - Q4: 2SB953A
  - Q7: 2SA1123R
  - Q8: 2SC1815GR
  - Q9: 2SD1277A
  - Q10: 2SB951A
- DIODES
  - D1, 2: SVDGERA1502Y
  - D3~6: SVDGS3V20-15
  - D7~9: MA165TA5
  - D10: SVDGRK14
  - D11: MA4062
  - D12: MA2062LF

*** P.C.B. Comparison chart by area.**

Area	P.C.B. No.	C3	F1	F2	F3	F4	AC Inlet Cover
M. MC	SXPG1352111B	○	4A, 125V		×	×	SJS9231A
N	SXPG1352121B	×	4A, 125V		×	×	
EN	SXPG135271B	×	×	1.6A, 250V	×	4A, 250V	
EZ	SXPG1352131B	○					
XL, XR	SXPG135291B	○	3.15A, 250V	1.6A, 250V	1.6A, 250V	4A, 250V	SJS9334A
Others	SXPG135281B	×					SJS9231A

AS AMP & POWER SUPPLY CIRCUIT BOARD

■ Products for (M) and (MC) areas. **SXPG1352111B**

■ Products for (N) area. **SXPG1352121B**

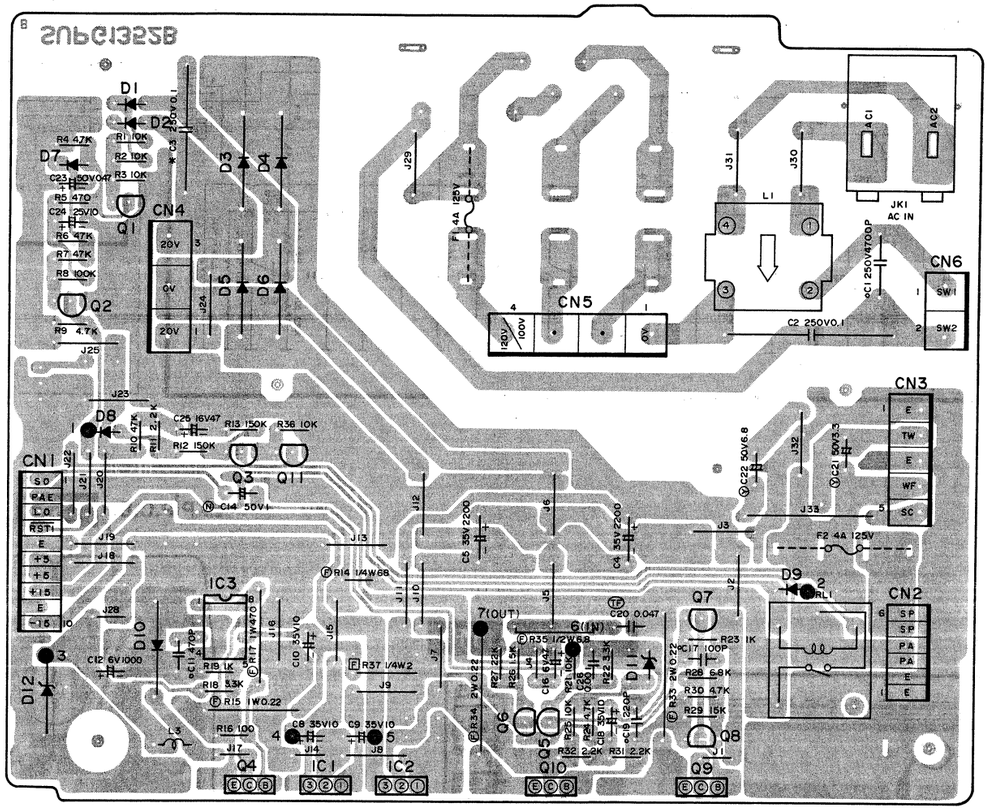

NOTES:
- FUSES

M MC F1, F2: XBA1C40NU100

N F1, 2: XBA1C40NS5

＊P.C.B. Comparison chart by area.

Area	P.C.B. No.	C3
M, MC	SXPG1352111B	○
N	SXPG1352121B	×

❶ RST1

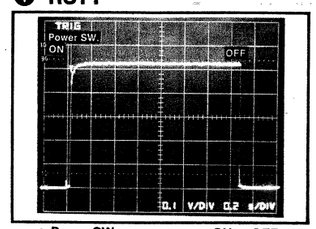

- Power SW.....ON → OFF

❷

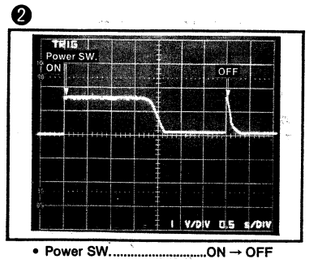

- Power SW.....ON → OFF

❸

+5V

■ Products for (EN) area. **SXPG135271B**

■ Products for (EZ) area. **SXPG1352131B**

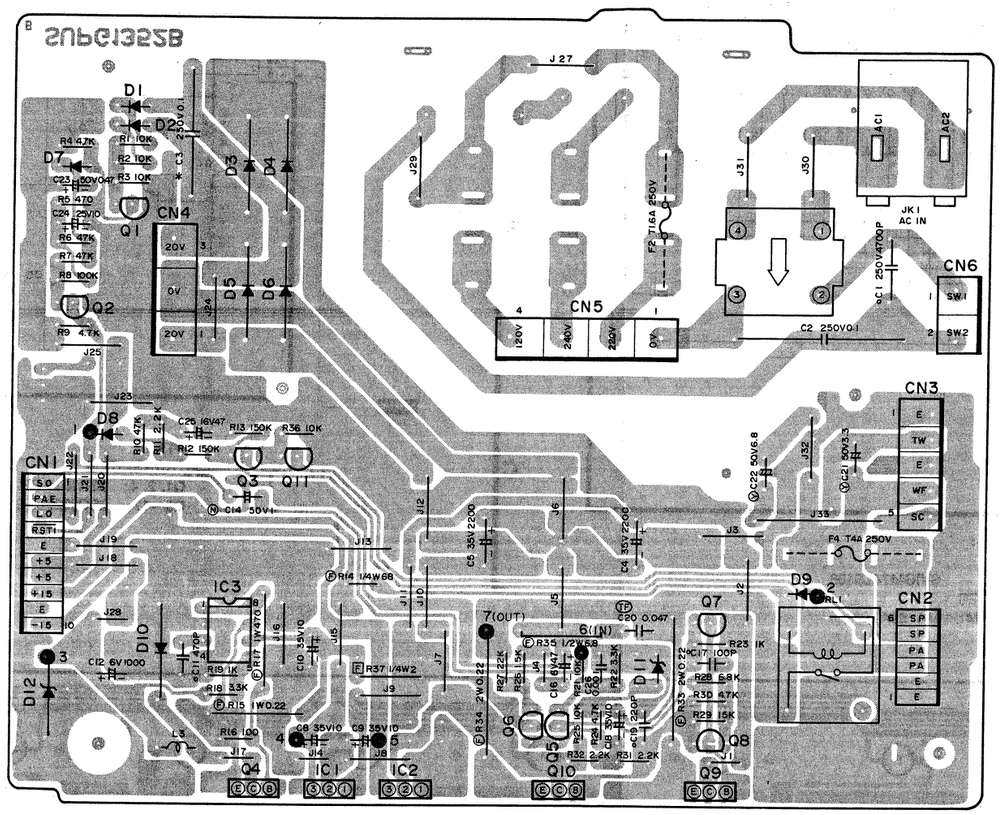

NOTES:
- FUSES

F2: XBA2C16TBO

F4: XBA2C40TBO

＊P.C.B. Comparison chart by area.

Area	P.C.B. No.	C3
EN	SXPG135271B	×
EZ	SXPG1352131B	○

❹, ❺

❹ +15V

❺ −15V

❻ IN

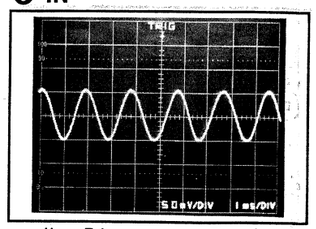

- Upper Tab.....Flute 8'
- U. Poly Volume.....Step 4
- Main Vol. Exp.....Max
- Upper Key.....C4

❼ OUT

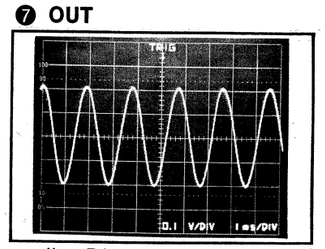

- Upper Tab.....Flute 8'
- U. Poly Volume.....Step 4
- Main Vol. Exp.....Max
- Upper Key.....C4

11B
21B

■ Products for (EN) area. **SXPG135271B**
■ Products for (EZ) area. **SXPG1352131B**

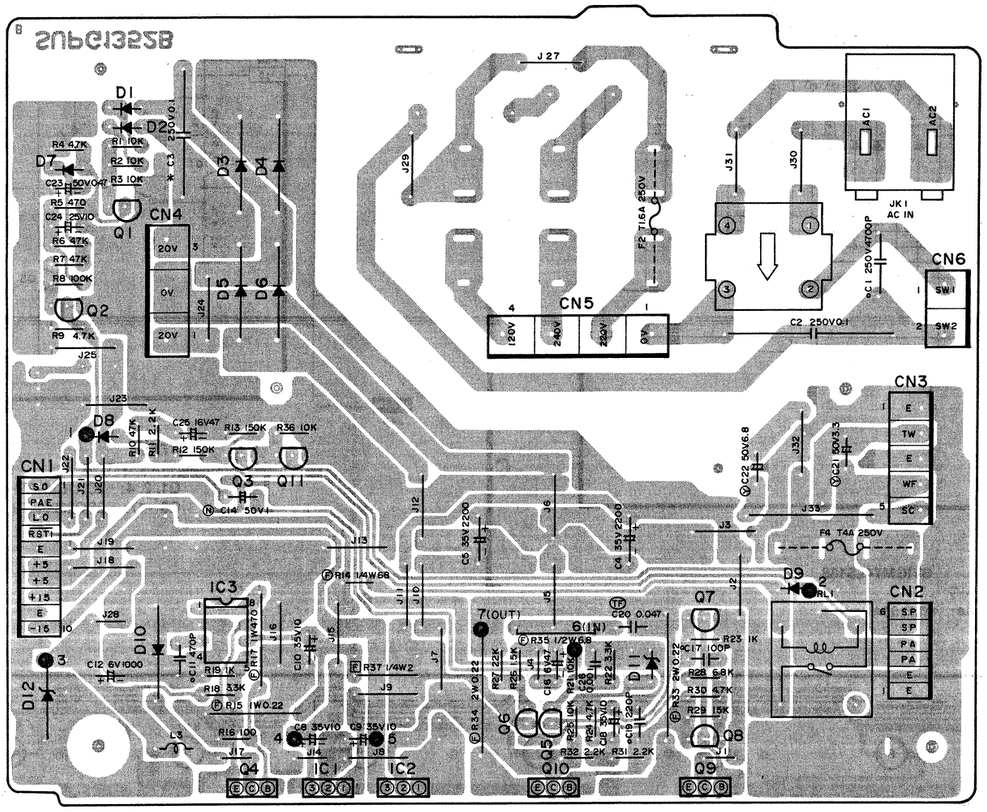

NOTES:
- FUSES
  F2: XBA2C16TBO
  F4: XBA2C40TBO

*** P.C.B. Comparison chart by area.**

Area	P.C.B. No.	C3
EN	SXPG135271B	×
EZ	SXPG1352131B	○

❹, ❺

❹ +15V
❺ −15V

❻ IN

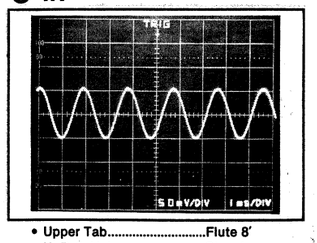

- Upper Tab.....Flute 8′
- U. Poly Volume.....Step 4
- Main Vol. Exp .....Max
- Upper Key.....C4

❼ OUT

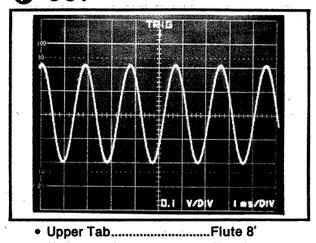

- Upper Tab.....Flute 8′
- U. Poly Volume.....Step 4
- Main Vol. Exp .....Max
- Upper Key.....C4

■ Products for (XL) and (XR) areas. **SXPG135291B**
■ Products for Asia and European areas except (EN) and (EZ). **SXPG135281B**

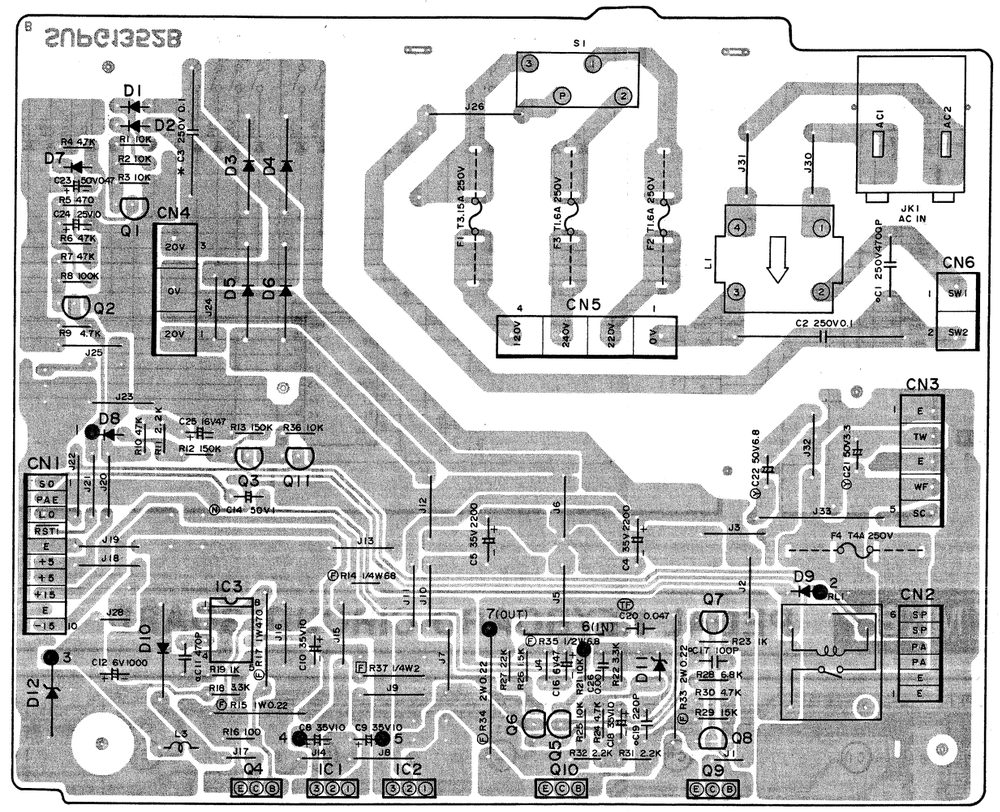

NOTES:
- FUSES
  F1: XBA2C31TBO
  F2, 3: XBA216TBO
  F4: XBA2C40TBO

*** P.C.B. Comparison chart by area.**

Area	P.C.B. No.	AC Inlet Cover	C3
XL, XR	SXPG135291B	SJS9334A	○
Others	SXPG135281B	SJS9231A	×

HP HEADPHONES CIRCUIT BOARD

SXPG135211C

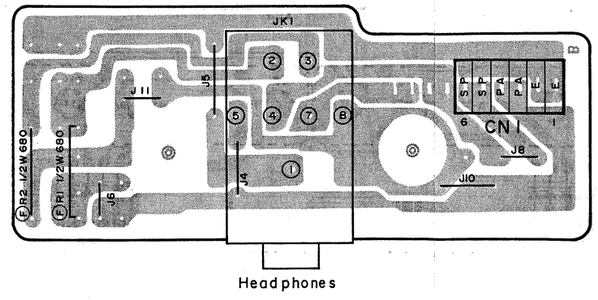

MKB MANUAL KEYBOARD CIRCUIT DIAGRAM

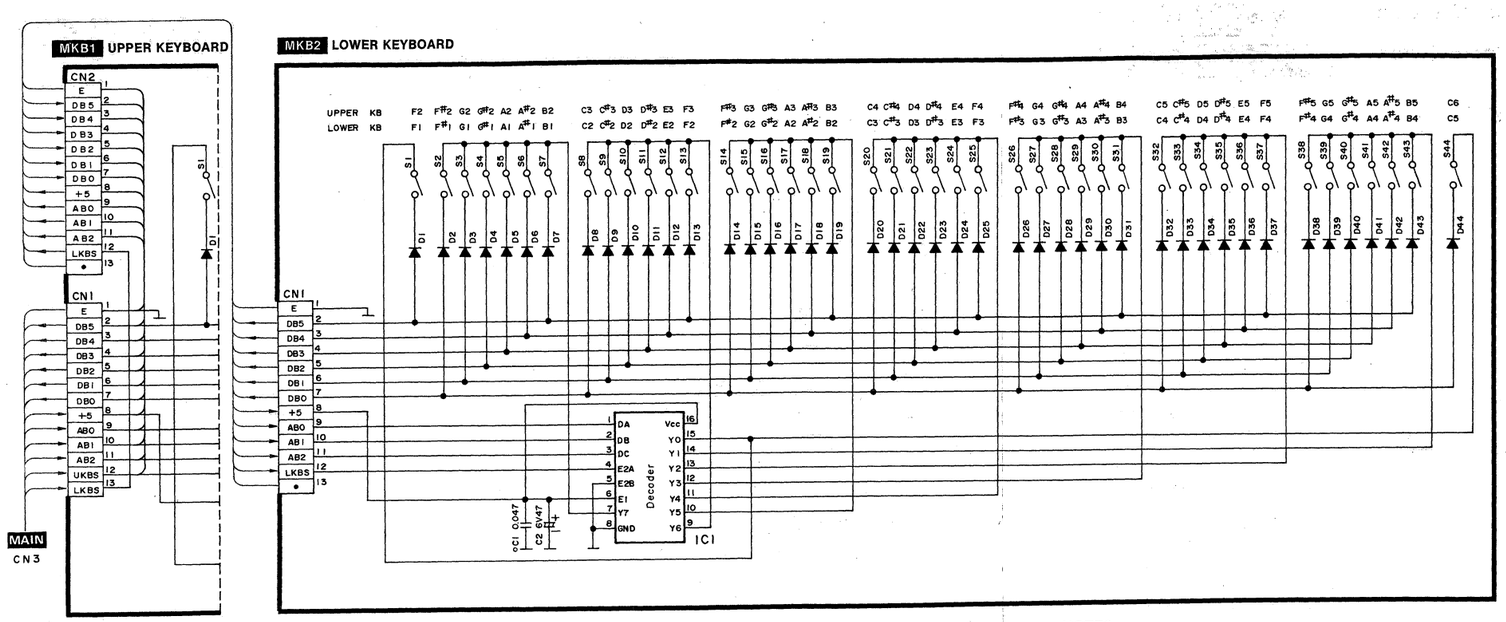

NOTES:
- IC
  IC1: SVIGM74LS138
- DIODES
  D1~44: MA162A

PKB EXP PEDAL KEYBOARD &

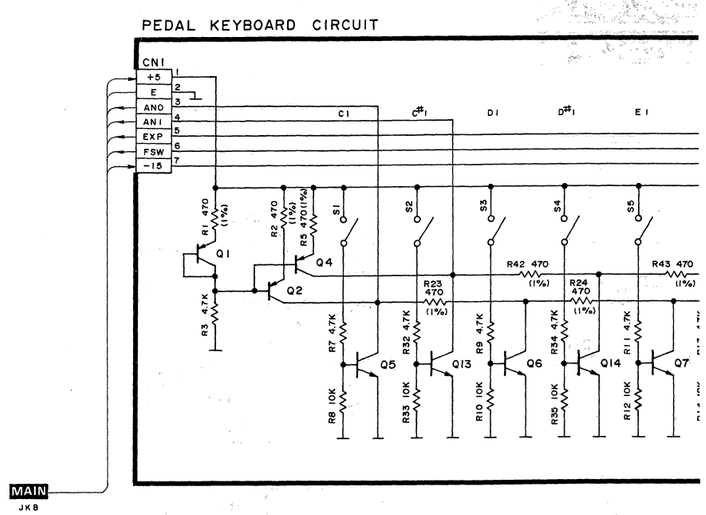

NOTES:
- TRANSISTOR
  Q1, 2, 4: 2SA1015-GR
  Q5~17: 2SC2320LFG

MKB PEDAL KEYBOARD CIRCUIT BOARD

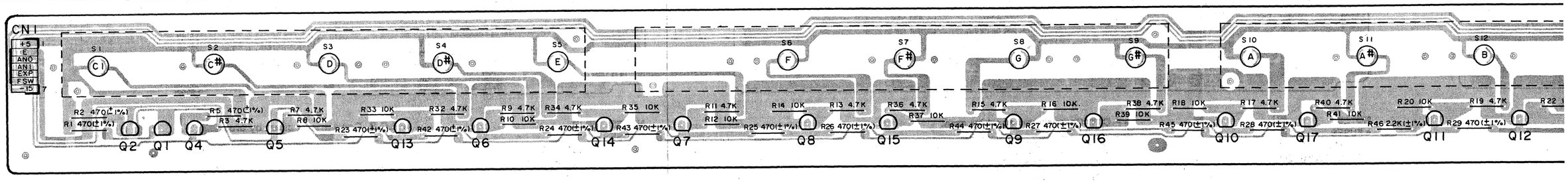

PKB MANUAL KEYBOARD CIRCUIT BOARD

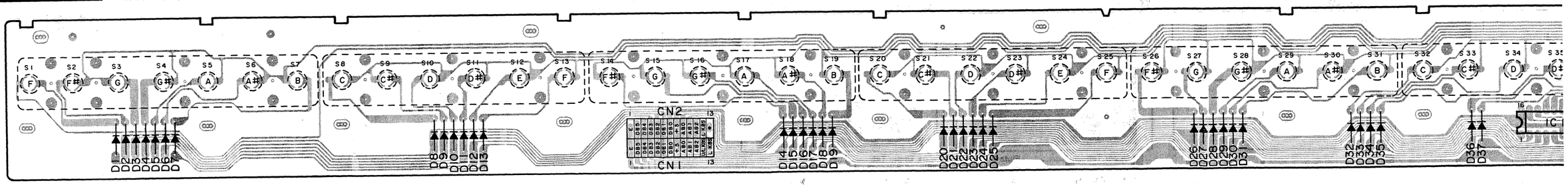

PEDAL KEYBOARD & EXP CIRCUIT DIAGRAM

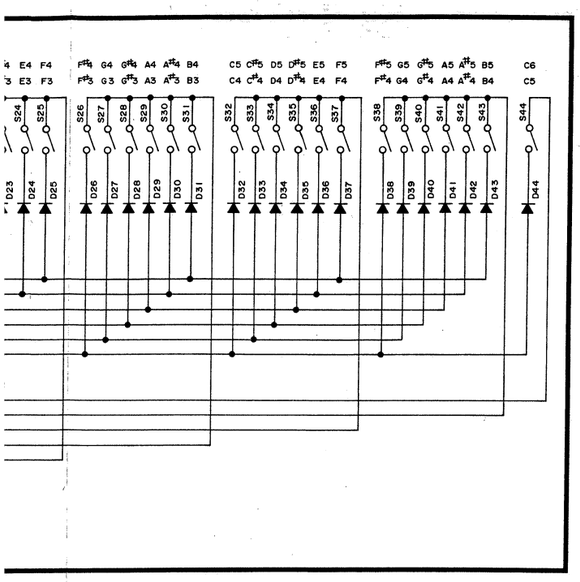

NOTES:
- IC
  IC1: SVIGM74LS138
- DIODES
  D1~44: MA162A

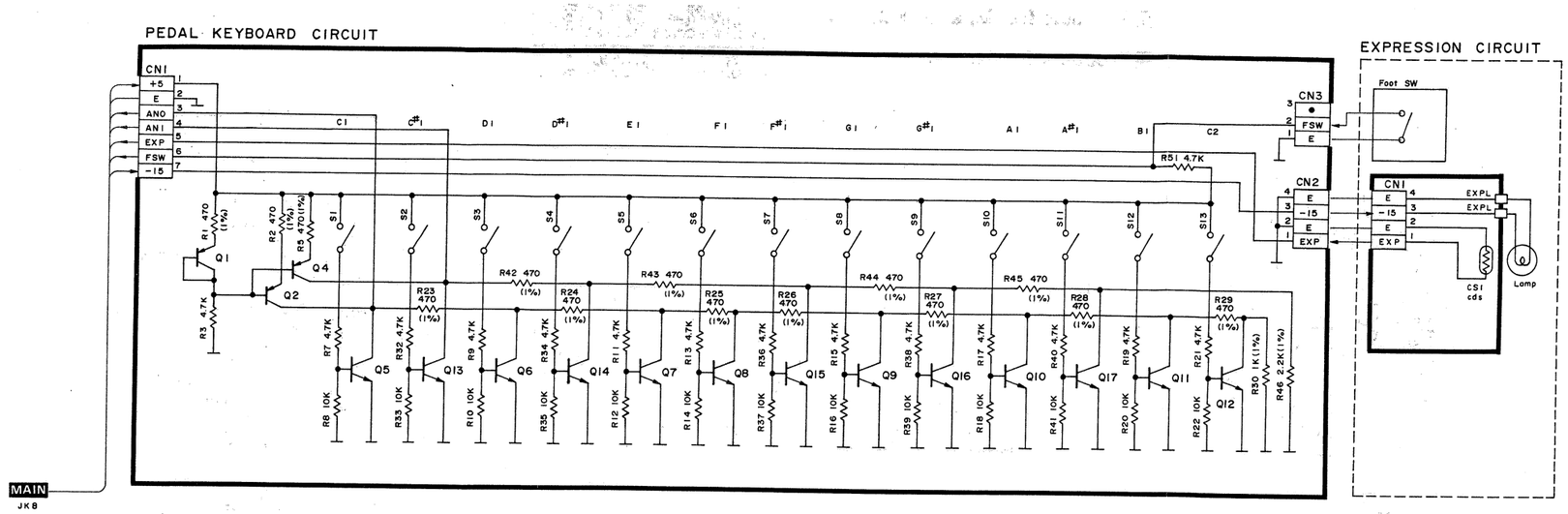

NOTES:
- TRANSISTOR
  Q1, 2, 4: 2SA1015-GR
  Q5~17: 2SC2320LFG

EXP P.C.B. SXPG103211

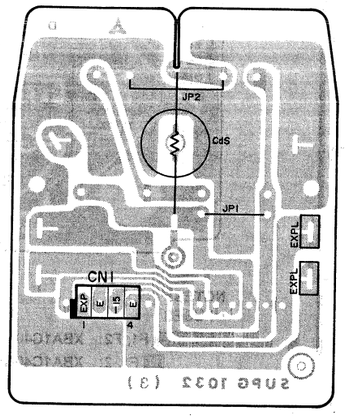

SXPG145111

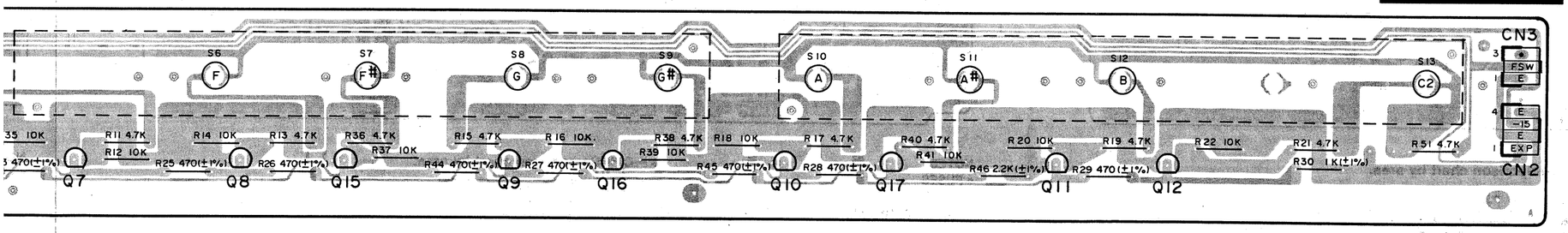

SXPG145311

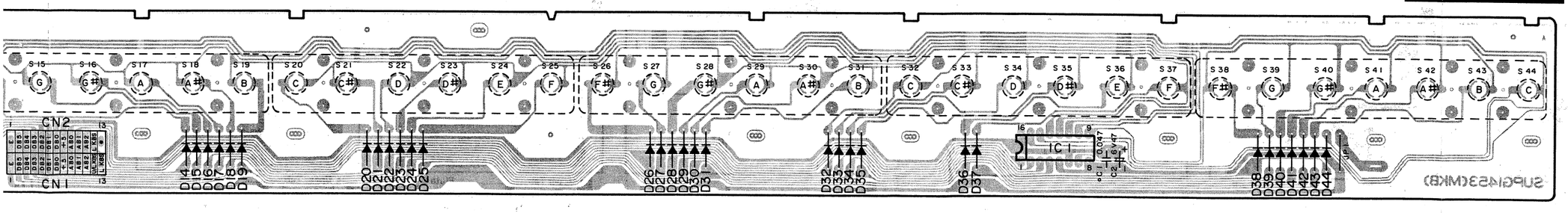

REPLACEMENT PARTS LIST.....P.C.B. and Wiring Parts

Notes:

1. Printed circuit board assembly with mark (NLA) is no longer available after production discontinuation of the complete set.
2. The MAIN P.C.B. part number is service standard parts and may differ from production parts. (Except [M] area)
3. The "S" mark is service standard parts and may differ from production parts.
4. Important safety notice
   Components identified by ⚠ mark have special characteristics important for safety. When replacing any of these components, use only manufacturer's specified parts.
5. ○ mark are new parts.
6. For part No. with area mark, check the area when placing an order.

■ PRINTED CIRCUIT BOARD

	NLA	Area	Part No.	Description	Per/Set
○	NLA	M	SXPG144641	MAIN	1
Ⓢ	NLA		SXPG144651	MAIN others	1
○	NLA		SXPG141931	FDCN	1
	NLA		SXPG135411	DP	1
○	NLA		SXPG1352111A	CPSL	1
○	NLA		SXPG144911	CPL	1
○	NLA		SXPG135331	CP	1
○	NLA	M MC	SXPG1352111B	AS	1
○	NLA	EZ	SXPG1352131B	AS	1
○	NLA	XL XR	SXPG135291B	AS	1
○	NLA	EN	SXPG135271B	AS	1
○	NLA		SXPG135281B	AS others	1
	NLA		SXPG135211C	HP	1
○	NLA		SXPG145311	MKB	2
○	NLA		SXPG145111	PKB	1
	NLA		SXPG103211	EXP	1

MAIN MAIN CIRCUIT

	Ref. No.	Part No.	Description	Per/Set
	INTEGRATED CIRCUITS			
	IC1	SVIG7810HCW	1 chip 8 bit Microcomputer	1
	IC2	SVIGM6050211	Gate Array	1
○	IC3	SVIGAEX25AX2	1M bit EP ROM	1
	IC4	SVIGD446415L	64K bit SRAM	1
	IC6	SVIGM74LS05	Hex Inverters (O.C.)	1
	IC7	SVIGTLP513	Photo Coupler	1
	IC10, 11, 21~23, 34, 36, 39, 42, 44, 45, 53, 70	SVIGM5218L	Operational Amplifier	13
	IC12, 14	MN6635	Tone Generator LSI	2
○	IC13	SVIGU3C04616	4M bit Mask ROM	1
	IC15, 16	SVIGBA9221	12 bit D-A Converter	2
	IC17, 18	SVIGM5238L	Operational Amplifier	2
	IC19, 20	SVIGTC4051BP	8-channel Multiplexer	2
	IC24~31	MN74HC4066	Quad Bilateral Switches	8
	IC41	SVIGM5241L	Dual VCA	1
	IC46	SVIGUPD4066B	Bilateral Switch	1
	IC47~49	SVIGMSM4011	2-input NAND Gate	3
	IC50~52	MN3006	BBD (128 stages)	3
	IC65	SVIGLM1894N	Dynamic Noise Reduction	1
	TRANSISTORS			
S	Q1~3	2SC2320LFG	2SC1310FG (SUB. Part)	3
	Q14, 15 M	2SB941	[M] area only	2
	Q5, 10, 11, 13	2SJ105GR	FET	4
S	Q8, 9	2SA1015-GR	2SA933STRS (SUB. Part)	2
	DIODES			
	D1~19	MA165TA5		19

Ref. No.	Part No.	Description	Per/Set
OSCILLATORS			
X1	SVQG49S1500T	15MHz, Quartz Oscillator	1
X2	EF0FC4004A3	4MHz, Ceramic Oscillator	1
X3	SVQG49S1600T	16MHz, Quartz Oscillator	1
COMPONENT COMBINATIONS			
Z2	EXBP88472JM	4.7KΩ×8	1
Z3, 4	EXKS14Z2073	1KΩ/2KΩ, Ladder Network	2
COILS			
L3~5, 11~13 M MC EZ XL	SLQG15W34DPQ	Coil, [M][MC][EZ][XL] areas only	6
JACKS			
JK1~3	SJSG1370A	MIDI (IN, OUT, THRU)	3
JK5, 7	SJJG400A	LINE OUT, AUX IN	2
JK8	SJSG1390A	PEDAL	1
SEMI-FIXED RESISTOR			
VR1	EVSG0E1B223A	22KΩ B, BBD Bias Adj.	1
RESISTORS			
R1, 2	ERDS2TJ472	4.7KΩ	2
R3	ERDS2TJ471	470Ω	1
R4	ERDS2TJ332	3.3KΩ	1
R5	ERDS2TJ681	680Ω	1
R6	ERDS2TJ330	33Ω	1
R7	ERDS2TJ102	1KΩ	1
R8	ERDS2TJ330	33Ω	1
R9	ERDS2TJ333	33KΩ	1
R10	ERDS2TJ472	4.7KΩ	1
R11	ERDS2TJ473	47KΩ	1
R14	ERDS2TJ472	4.7KΩ	1
R15	ERDS2TJ101	100Ω	1
R16	ERDS2TJ184	180KΩ	1
R17	ERDS2TJ101	100Ω	1
R18 ⚠	ERD2FCJ4R7	4.7Ω, 1/4W, Fuse Type	1
R19	ERDS2TJ223	22KΩ	1
R21	ERDS2TJ223	22KΩ	1
R23, 24	ERDS2TJ472	4.7KΩ	2
R25	ERDS2TJ103	10KΩ	1
R27	ERDS2TJ221	220Ω	1
R28~30	ERDS2TJ101	100Ω	3
R31	ERDS2TJ334	330KΩ	1
R32	ERDS2TJ103	10KΩ	1
R33	ERDS2TJ101	100Ω	1
R34	ERDS2TJ334	330KΩ	1
R35	ERDS2TJ103	10KΩ	1
R39	ERDS2TJ105	1MΩ	1
R40	ERDS2TJ472	4.7KΩ	1
R41	ERDS2TJ333	33KΩ	1
R42	ERDS2TJ222	2.2KΩ	1
R43	ERDS2TJ103	10KΩ	1
R44	ERDS2TJ184	180KΩ	1

Ref. No.	Part No.	Description	Per/Set
R45	ERDS2TJ474	470KΩ	1
R46	ERDS2TJ124	120KΩ	1
R47	ERDS2TJ184	180KΩ	1
R48	ERDS2TJ124	120KΩ	1
R50	ERDS2TJ471	470Ω	1
R58	ERDS2TJ105	1MΩ	1
R59, 60	ERDS2TJ124	120KΩ	2
R61, 62	ERDS2TJ471	470Ω	2
R63	ER0S2TKF4700	470Ω, ±1%	1
R64, 65	ERDS2TJ471	470Ω	2
R66	ERDS2TJ123	12KΩ	1
R67	ER0S2TKF4700	470Ω, ±1%	1
R68, 69	ERDS2TJ473	47KΩ	2
R73	ERDS2TJ473	47KΩ	1
R77	ERDS2TJ473	47KΩ	1
R81	ERDS2TJ473	47KΩ	1
R85	ERDS2TJ473	47KΩ	1
R89	ERDS2TJ473	47KΩ	1
R93	ERDS2TJ473	47KΩ	1
R97	ERDS2TJ473	47KΩ	1
R101	ERDS2TJ473	47KΩ	1
R102	ERDS2TJ683	68KΩ	1
R103	ERDS2TJ224	220KΩ	1
R104	ERDS2TJ333	33KΩ	1
R109	ERDS2TJ473	47KΩ	1
R113	ERDS2TJ473	47KΩ	1
R117	ERDS2TJ473	47KΩ	1
R121	ERDS2TJ473	47KΩ	1
R125	ERDS2TJ473	47KΩ	1
R129	ERDS2TJ473	47KΩ	1
R133	ERDS2TJ473	47KΩ	1
R136 ⚠	ERD2FCG220	22Ω, 1/4W, Fuse Type	1
R137	ERDS2TJ473	47KΩ	1
R138, 139	ERDS2TJ333	33KΩ	2
R140, 141	ER0S2TKF4700	470Ω, ±1%	2
R142, 143	ERDS2TJ471	470Ω	2
R148	ERDS2TJ223	22KΩ	1
R149	ERDS2TJ103	10KΩ	1
R150	ERDS2TJ223	22KΩ	1
R151	ERDS2TJ103	10KΩ	1
R152	ERDS2TJ223	22KΩ	1
R153	ERDS2TJ103	10KΩ	1
R155~158	ERDS2TJ223	22KΩ	4
R160	ERDS2TJ473	47KΩ	1
R169	ERDS2TJ472	4.7KΩ	1
R170~172	ERDS2TJ473	47KΩ	3
R177	ERDS2TJ472	4.7KΩ	1
R178~180	ERDS2TJ473	47KΩ	3
R181	ERDS2TJ472	4.7KΩ	1
R182~184	ERDS2TJ473	47KΩ	3
R190	ERDS2TJ105	1MΩ	1
R197	ERDS2TJ472	4.7KΩ	1
R198	ERDS2TJ474	470KΩ	1
R199	ERDS2TJ104	100KΩ	1
R200	ERDS2TJ332	3.3KΩ	1
R201	ERDS2TJ474	470KΩ	1
R202	ERDS2TJ104	100KΩ	1
R203	ERDS2TJ222	2.2KΩ	1
R204	ERDS2TJ223	22KΩ	1
R205, 206	ERDS2TJ103	10KΩ	2
R215~220	ERDS2TJ474	470KΩ	6
R221, 222	ERDS2TJ223	22KΩ	2
R223	ERDS2TJ473	47KΩ	1
R224	ERDS2TJ184	180KΩ	1
R225	ERDS2TJ332	3.3KΩ	1
R226	ERDS2TJ153	15KΩ	1
R227	ERDS2TJ103	10KΩ	1
R228	ERDS2TJ153	15KΩ	1

Ref. No.	Part No.	Description	Per/Set
R229	ERDS2TJ223	22KΩ	1
R230	ERDS2TJ332	3.3KΩ	1
R231	ERDS2TJ184	180KΩ	1
R232	ERDS2TJ153	15KΩ	1
R233	ERDS2TJ103	10KΩ	1
R234, 235	ERDS2TJ153	15KΩ	2
R236	ERDS2TJ223	22KΩ	1
R237	ERDS2TJ153	15KΩ	1
R239, 240	ERDS2TJ153	15KΩ	2
R241	ERDS2TJ223	22KΩ	1
R242	ERDS2TJ184	180KΩ	1
R243, 244	ERDS2TJ332	3.3KΩ	2
R245, 246	ERDS2TJ184	180KΩ	2
R247, 248	ERDS2TJ332	3.3KΩ	2
R249	ERDS2TJ184	180KΩ	1
R255	ERDS2TJ473	47KΩ	1
R256	ERDS2TJ472	4.7KΩ	1
R257	ERDS2TJ124	120KΩ	1
R269	ERDS2TJ473	47KΩ	1
R270	ERDS2TJ153	15KΩ	1
R272	ERDS2TJ152	1.5KΩ	1
R273	ERDS2TJ184	180KΩ	1
R274	ERDS2TJ331	330Ω	1
R275	ERDS2TJ681	680Ω	1
R276	ERDS2TJ331	330Ω	1
R277	ERDS2TJ471	470Ω	1
R278	ERDS2TJ101	100Ω	1
R279	ERDS2TJ333	33KΩ	1
R280, 281	ERDS2TJ222	2.2KΩ	2
R283, 284	ERDS2TJ153	15KΩ	2
R285	ERDS2TJ682	6.8KΩ	1
R286	ERDS2TJ223	22KΩ	1
R290	ERDS2TJ683	68KΩ	1
R291	ERDS2TJ471	470Ω	1
R293	ERDS2TJ103	10KΩ	1
R296	ERDS2TJ474	470KΩ	1
R297	ERDS2TJ472	4.7KΩ	1
R301	ERDS2TJ223	22KΩ	1
R302	ERDS2TJ104	100KΩ	1
R303	ERDS2TJ472	4.7KΩ	1
R305 ⚠	ERQ14AJ2R0P	2Ω, 1/4W, Fuse Type	1
R306, 307 ⚠	ERD2FCJ4R7	4.7Ω, 1/4W, Fuse Type	2
R308	ERDS2TJ473	47KΩ	1
R309	ERDS2TJ102	1KΩ	1
R312	ERDS2TJ472	4.7KΩ	1
R315	ERDS2TJ154	150KΩ	1
R317	ERDS2TJ333	33KΩ	1
R318	ERDS2TJ153	15KΩ	1
R319	ERDS2TJ103	10KΩ	1
R321	ERDS2TJ154	150KΩ	1
R322 ⚠	ERD2FCG220	22Ω, 1/4W, Fuse Type	1
R323	ERDS2TJ154	150KΩ	1
R324	ERDS2TJ153	15KΩ	1
R325	ERDS2TJ333	33KΩ	1
R326	ERDS2TJ154	150KΩ	1
R327	ERDS2TJ103	10KΩ	1
R328, 329	ERDS2TJ333	33KΩ	2
R330 ⚠	ERD2FCG220	22Ω, 1/4W, Fuse Type	1
R331	ERDS2TJ154	150KΩ	1
R333	ERDS2TJ103	10KΩ	1
R334	ERDS2TJ154	150KΩ	1
R339	ERDS2TJ331	330Ω	1
R340	ERDS2TJ123	12KΩ	1
R344	ERDS2TJ333	33KΩ	1
R346, 347 ⚠	ERX2ANJPR22S	0.22Ω, 2W, Flame-Proof	2
R348	ERDS2TJ822	8.2KΩ	1
R349	ERDS2TJ102	1KΩ	1
R350	ERDS2TJ151	150Ω	1

Ref. No.	Part No.	Description	Per/Set
R353	ERDS2TJ474	470KΩ	1
R355	ERDS2TJ473	47KΩ	1
R358	ERDS2TJ472	4.7KΩ	1
R365	ERDS2TJ472	4.7KΩ	1
R382	ERDS2TJ153	15KΩ	1
R401	ERDS2TJ472	4.7KΩ	1
R402	ERDS2TJ105	1MΩ	1
R403	ERDS2TJ472	4.7KΩ	1
R404	ERDS2TJ105	1MΩ	1
R407, 408	ERDS2TJ472	4.7KΩ	2
R410	ERDS2TJ681	680Ω	1
R411	ERDS2TJ333	33KΩ	1
R412	ERDS2TJ153	15KΩ	1
CAPACITORS			
C1	ECCR1H221J	220pF	1
C2	ECKR1E473ZV	0.047μF	1
C3	ECQG1H102KZ	0.001μF	1
C4, 5	ECCR1H220J	22pF, Except [M][MC][EZ][XL] areas	2
C6, 7	ECKR1E473ZV	0.047μF	2
C8	ECEA0JU101	100μF, 6.3V	1
C9	ECEA0JU331	330μF, 6.3V	1
C10~12	ECKR1E473ZV	0.047μF	3
C15	ECEA1HU010	1μF, 50V	1
C16	ECQM1H153KV	0.015μF	1
C17	ECQV1H224JZ	0.22μF	1
C19	ECQM1H153KV	0.015μF	1
C20	ECRR1H104ZF	0.1μF	1
C22	ECKR1E473ZV	0.047μF	1
C23	AC2061G473Z5	0.047F, 5.5V	1
C24	ECEA0JU101	100μF, 6.3V	1
C26	ECRR1H104ZF	0.1μF	1
C27, 28	ECCR1H220J	22pF	2
C29~31	ECKR1E473ZV	0.047μF	3
C32	ECCR1H221J	220pF	1
C33	ECEA0JU331	330μF, 6.3V	1
C34	ECEA0JU470	47μF, 6.3V	1
C35	ECEA0JU331	330μF, 6.3V	1
C36	ECQG1H472KZ	0.0047μF	1
C37	ECQG1H102KZ	0.001μF	1
C38	ECQG1H472KZ	0.0047μF	1
C39	ECQG1H102KZ	0.001μF	1
C40	ECQG1H472KZ	0.0047μF	1
C41	ECQG1H102KZ	0.001μF	1
C42	ECQG1H472KZ	0.0047μF	1
C43	ECQG1H102KZ	0.001μF	1
C44	ECQG1H472KZ	0.0047μF	1
C45	ECQG1H102KZ	0.001μF	1
C46	ECQG1H472KZ	0.0047μF	1
C47	ECQG1H102KZ	0.001μF	1
C48	ECQG1H472KZ	0.0047μF	1
C49	ECQG1H102KZ	0.001μF	1
C50	ECQG1H472KZ	0.0047μF	1
C51	ECQG1H102KZ	0.001μF	1
C52	ECCR1H331J	330pF	1
C53	ECCR1H221J	220pF	1
C54	ECCR1H681J	680pF	1
C56	ECQG1H472KZ	0.0047μF	1
C57	ECQG1H102KZ	0.001μF	1
C58	ECQG1H472KZ	0.0047μF	1
C59	ECQG1H102KZ	0.001μF	1
C60	ECQG1H472KZ	0.0047μF	1
C61	ECQG1H102KZ	0.001μF	1
C62	ECQG1H472KZ	0.0047μF	1
C63	ECQG1H102KZ	0.001μF	1
C64	ECQG1H472KZ	0.0047μF	1

Ref. No.	Part No.	Description	Per/Set
C65	ECQG1H102KZ	0.001μF	1
C66	ECQG1H472KZ	0.0047μF	1
C67	ECQG1H102KZ	0.001μF	1
C68	ECQG1H472KZ	0.0047μF	1
C69	ECQG1H102KZ	0.001μF	1
C70	ECQG1H472KZ	0.0047μF	1
C71	ECQG1H102KZ	0.001μF	1
C72, 73	ECCR1H681J	680pF	2
C74, 75	ECKR1E473ZV	0.047μF	2
C76	ECCR1H221J	220pF	1
C77	ECEA0JU331	330μF, 6.3V	1
C79	ECEA0JU331	330μF, 6.3V	1
C82	ECEA1HU010	1μF, 50V	1
C86	ECKR1E473ZV	0.047μF	1
C87	ECEA1HU010	1μF, 50V	1
C88	ECKR1E473ZV	0.047μF	1
C89	ECEA1HU010	1μF, 50V	1
C90	ECKR1E473ZV	0.047μF	1
C94	ECQG1H152KZ	0.0015μF	1
C98	ECCR1H471J	470pF	1
C99	ECQG1H222KZ	0.0022μF	1
C100, 101	ECCR1H471J	470pF	2
C102	ECCR1H101J	100pF	1
C107, 108	ECCR1H471J	470pF	2
C109	ECQG1H222KZ	0.0022μF	1
C110	ECCR1H101J	100pF	1
C112	ECCR1H681J	680pF	1
C113	ECCR1H471J	470pF	1
C114	ECCR1H151J	150pF	1
C115	ECEA1HU010	1μF, 50V	1
C120, 121	ECQV1H334JZ	0.33μF	2
C122	ECEA1HU010	1μF, 50V	1
C123, 124	ECCR1H151J	150pF	2
C125	ECEA1EU100	10μF, 25V	1
C126, 127	ECCR1H151J	150pF	2
C128, 129	ECEA1EU100	10μF, 25V	2
C130, 131	ECCR1H151J	150pF	2
C132	ECQM1H103KV	0.01μF	1
C133	ECQV1H104JZ	0.1μF	1
C136	ECCR1H220J	22pF	1
C137	ECEA1HU010	1μF, 50V	1
C138	ECQV1H224JZ	0.22μF	1
C139	ECEA1CU470	47μF, 16V	1
C140	ECQG1H682KZ	0.0068μF	1
C141	ECQV1H104JZ	0.1μF	1
C142	ECQG1H102KZ	0.001μF	1
C143	ECQG1H332KZ	0.0033μF	1
C144, 145	ECEA1HU010	1μF, 50V	2
C146	ECEA1CU470	47μF, 16V	1
C147	ECQG1H102KZ	0.001μF	1
C148	ECEA1EU100	10μF, 25V	1
C149	ECQV1H473JZ	0.047μF	1
C150	ECCR1H220J	22pF	1
C153	ECKR1E473ZV	0.047μF	1
C154	ECCR1H101J	100pF	1
C158	ECEA1HU010	1μF, 50V	1
C159	ECEA1HN010S	1μF, 50V	1
C160	ECCR1H220J	22pF	1
C161	ECEA1HN010S	1μF, 50V	1
C162	ECEA0JU331	330μF, 6.3V	1
C163, 164	ECEA1CU101	100μF, 16V	2
C166, 167	ECEA1CU470	47μF, 16V	2
C171	ECKR1E473ZV	0.047μF	1
C173	ECEA1CU470	47μF, 16V	1
C174	ECCR1H681J	680pF	1
C175	ECCR1H331J	330pF	1
C176	ECKR1E473ZV	0.047μF [M][MC][EZ][XL] areas only	1
C177	ECCR1H331J	330pF	1

Ref. No.	Part No.	Description	Per/Set
C178	ECEA1CU470	47μF, 16V	1
C179	ECCR1H681J	680pF	1
C180	ECCR1H471J	470pF	1
C181	ECQG1H222KZ	0.0022μF	1
C182	ECCR1H101J	100pF	1
C183	ECQV1H104JZ	0.1μF	1
C184	ECEA1CU470	47μF, 16V	1
C185	ECCR1H681J	680pF	1
C190	ECQV1H474JZ	0.47μF	1
C194	ECQV1H473JZ	0.047μF	1
C198	ECQG1H682KZ	0.0068μF	1
C199	ECEA0JU331	330μF, 6.3V, [M] area only	1
C200, 201	ECKR1E473ZV	0.047μF	2
C202	ECEA0JU331	330μF, 6.3V	1
C203	ECKR1E473ZV	0.047μF	1
C205, 206	ECKR1E473ZV	0.047μF	2
C208~214	ECKR1E473ZV	0.047μF	7
C216	ECQG1H472KZ	0.0047μF	1
C217	ECQG1H222KZ	0.0022μF	1
C300	ECQG1H332KZ	0.0033μF	1
C312, 313	ECKR1E473ZV	0.047μF	2
C320	ECRR1H104ZF	0.1μF	1

DP DRUM PARCUSSION CIRCUIT

Ref. No.	Part No.	Description	Per/Set
INTEGRATED CIRCUITS			
IC1	MN50015PGQ	Gate Array	1
IC2	MN231001PGW	1M bit Mask ROM	1
IC3	SVIGHA17008P	8 bit D-A Converter	1
IC4	SVIGMSM4051R	8-channel Multiplexer	1
IC5	SVIGM5238L	Operational Amplifier	1
COMPONENT COMBINATIONS			
Z1	EXKS14Z2073	1KΩ/2KΩ, Ladder Network	1
RESISTORS			
R4	ERDS2TJ472	4.7KΩ	1
R5	ERDS2TJ103	10KΩ	1
R6, 7	ERDS2TJ471	470Ω	2
R8	ERDS2TJ682	6.8KΩ	1
R9~11	ERDS2TJ222	2.2KΩ	3
R12	ERDS2TJ223	22KΩ	1
R14	ERDS2TJ223	22KΩ	1
R13	ERDS2TJ104	100KΩ	1
CAPACITORS			
C4	ECEA1HU010	1μF, 50V	1
C5, 6	ECKR1E473ZV	0.047μF	2
C9	ECCR1H151J	150pF	1
C10	ECKR1E473ZV	0.047μF	1
C12	ECCR1H681J	680pF	1
C13	ECCR1H680J	68pF	1
C14	ECKR1E473ZV	0.047μF	1

CPSL SIDE CONTROL PANEL CIRCUIT

	Ref. No.	Part No.	Description	Per/Set
	INTEGRATED CIRCUITS			
	IC1	MN15524PGY	1 chip 4 bit Microcomputer	1
	IC2~4	SVIGM74LS07	Hex Buffers (O.C.)	3
	TRANSISTORS			
	Q1~4	2SA830B		4
	Q5~6	2SC1047C		2
S	Q7	2SA1015-GR	2SA933STRS (SUB. Part)	1
	DIODES			
	D3, 6~24, 27~45, 49~67, 70~87, 173, 175	MA165TA5	DIODE	78
	D89~99, 102~107, 109~127, 134~148, 151~166, 168	SVDGSEL4117R	LED (Red)	68
	D100, 101, 131~133, 167, 174	SVDGSEL4417G	LED (Green)	7
	OSCILLATOR			
	X1	EF0FC4004A3	4MHz, Ceramic Oscillator	1
	SWITCHES			
	S1	SSSG1011A	Transpose	1
	S6~24, 27~45, 49~66	SSHG1045A	Push switch	56
	S69~87	SSHG1045A	Push switch	19
	VARIABLE RESISTOR			
	VR1	EVD06510B24G	20KΩ B, TEMPO CONTROL	1
	RESISTORS			
	R1	ERDS2TJ222	2.2KΩ	2
	R2~6	ERDS2TJ103	10KΩ	5
	R7~10	ERDS2TJ152	1.5KΩ	4
	R14	ERDS2TJ330	33Ω	1
	R15~32	ERDS2TJ470	47Ω	18
	R33, 34	ERDS2TJ472	4.7KΩ	2
	R35	ERDS2TJ222	2.2KΩ	1
	R36~39	ERDS2TJ152	1.5KΩ	4
	R41~59	ERDS2TJ152	1.5KΩ	19
	CAPACITORS			
	C1	ECEA0JK470	47μF, 6.3V	1
	C2	ECRR1H104ZF	0.1μF	1
	C3	ECBA1H471KB	470pF	1

CPL CONTROL PANEL LEFT CIRCUIT

	Ref. No.	Part No.	Description	Per/Set
	INTEGRATED CIRCUITS			
	IC1, 2	SVIGM74LS174	Hex D-type Flip-Flops	2
	IC3	SVIGM74LS138	Decoder	1
	IC4	SVIGUPD7225	LCD Driver	1
	TRANSISTORS			
S	Q1	2SA1015-GR	2SA933STRS (SUB. Part)	1
S	Q2, 3	2SC2320LFG	2SC1310FG (SUB. Part)	2
	DIODES			
	D1~12	MA165TA5	Diode	12
	D13~24	SVDGSEL4117R	LED (Red)	12
	LCD DISPLAY			
○	LCD1	SXEG101A	LCD Display	1
	SWITCHES			
	S1~12	SSHG1045A	Push switch	12
	RESISTORS			
	R1~12	ERDS2TJ221	220Ω	12
	R14	ERDS2TJ332	3.3KΩ	1
	R15	ERDS2TJ103	10KΩ	1
	R16	ERDS2TJ184	180KΩ	1
	R17, 18	ERDS2TJ472	4.7KΩ	2
	R19	ERDS2TJ104	100KΩ	1
	R20	ERDS2TJ103	10KΩ	1
	R21, 22	ERDS2TJ472	4.7KΩ	2
	CAPACITORS			
	C1	ECRR1H104ZF	0.1μF	1
	C2	ECEA0JK470	47μF, 6.3V	1
	C3~5	ECRR1H104ZF	0.1μF	3

CP CONTROL PANEL RIGHT CIRCUIT

	Ref. No.	Part No.	Description	Per/Set
	INTEGRATED CIRCUITS			
	IC1	SVIGM74LS138	Decoder	1
	IC3	SVIGM74LS174	Hex D-type Flip-Flops	1
	TRANSISTOR			
S	Q1	2SA1015-GR	2SA933STRS (SUB. Part)	1
	DIODES			
	D13~16	MA165TA5	Diode	4
	D19, 23~25	SVDGSEL4417G	LED (Green)	4
	SWITCHES			
	S1~4	SSHG1045A	Push switch	4
	RESISTORS			
	R1	ERDS2TJ332	3.3KΩ	1
	R2	ERDS2TJ103	10KΩ	1
	R9~12	ERDS2TJ221	220Ω	4
	R19	ERDS2TJ221	220Ω	1
	CAPACITORS			
	C1, 2	ECRR1H104ZF	0.1μF	2

AS AMP & POWER SUPPLY CIRCUIT

	Ref. No.	Part No.	Description	Per/Set
	INTEGRATED CIRCUITS			
	IC1	SVIGM5F7815	Voltage Regulator	1
	IC2	SVIGM5F7915	Voltage Regulator	1
	IC3	SVIGM5291P	Switching Regulator	1
	TRANSISTORS			
S	Q1~3, 5, 6, 11	2SC2320LFG	2SC1310FG (SUB. Part)	6
	Q4	2SB953A		1
	Q7	2SA1123S		1
	Q8	2SC1815GR		1
	Q9	2SD1277A		1
	Q10	2SB951A		1
	DIODES			
	D1, 2 ⚠	SVDGERA1502Y	Rectifier	2
	D3~6 ⚠	SVDGS3V20-15	Rectifier	4
	D7~9	MA165TA5		3
	D10	SVDGRK14S		1
	D11	MA4062	Zener, 6.2V	1
	D12	MA2062LF	Zener, 6.2V	1
	COILS & LINE FILTER			
	L1 ⚠	SLTGLF3	Line Filter	1
	L3	SLCG1A121T	Coil	1
	JACK			
	JK1 ⚠	SJVD0203B	AC Inlet	1
	SWITCH			
	S1 ⚠	SSRG100A	Voltage Selector, Except for [EN][EZ][M][MC] areas	1
	RELAY			
	RL1	SSYGMR30112	Relay	1
	FUSES			
	F1, 2 ⚠ M MC	XBA1C40NU100	4A, 125V, [M][MC] areas	2
	F2 EN EZ ⚠	XBA2C16TB0	T1.6A, 250V } [EN][EZ] areas	1
	F4 EN EZ ⚠	XBA2C40TB0	T4A, 250V } [EN][EZ] areas	1
	F1 ⚠	XBA2C31TB0	T3.15A, 250V } others	1
	F2, 3 ⚠	XBA2C16TB0	T1.6A, 250V } others	2
	F4 ⚠	XBA2C40TB0	T4A, 250V } others	1

Ref. No.	Part No.	Description	Per/Set
AC INLET COVER			
XL XR ⚠	SJS9334A	AC Inlet Cover, [XL][XR] areas	1
⚠	SJS9231A	AC Inlet Cover, other areas	1
RESISTORS			
R1~3	ERDS2TJ103	10KΩ	3
R4	ERDS2TJ472	4.7KΩ	1
R5	ERDS2TJ471	470Ω	1
R6, 7	ERDS2TJ473	47KΩ	2
R8	ERDS2TJ104	100KΩ	1
R9	ERDS2TJ472	4.7KΩ	1
R10	ERDS2TJ473	47KΩ	1
R11	ERDS2TJ222	2.2KΩ	1
R12, 13	ERDS2TJ154	150KΩ	2
R14 ⚠	ERD25FVJ680	68Ω, 1/4W, Flame-Proof	1
R15 ⚠	ERX1ANJPR22S	0.22Ω, 1W, Flame-Proof	1
R16	ERDS2TJ101	100Ω	1
R17	ERG1ANJP471S	470Ω, 1W, Flame-Proof	1
R18	ERDS2TJ332	3.3KΩ	1
R19	ERDS2TJ102	1KΩ	1
R21	ERDS2TJ103	10KΩ	1
R22	ERDS2TJ332	3.3KΩ	1
R23	ERDS2TJ102	1KΩ	1
R24	ERDS2TJ472	4.7KΩ	1
R25	ERDS2TJ103	10KΩ	1
R26	ERDS2TJ152	1.5KΩ	1
R27	ERDS2TJ223	22KΩ	1
R28	ERDS2TJ682	6.8KΩ	1
R29	ERDS2TJ153	15KΩ	1
R30	ERDS2TJ472	4.7KΩ	1
R31, 32	ERDS2TJ222	2.2KΩ	2
R33, 34 ⚠	ERX2ANJPR22S	0.22Ω, 2W, Flame-Proof	2
R35 ⚠	ERD50FJ6R8	6.8Ω, 1/2W, Flame-Proof	1
R36	ERDS2TJ103	10KΩ	1
R37 ⚠	ERQ14AJ2R0P	2Ω, 1/4W, Fuse Type	1
CAPACITORS			
C1 ⚠	ECKCVA1472MF	4700pF, 250V, Line-Capacitor	1
C2 ⚠	ECQU2A104MN	0.1μF, 250V, Across-the Line-Capacitor	1
C3 EZ XL ⚠ XR M MC	ECQE2A104MW	0.1μF, 250V, [EZ][XL][XR][M][MC] areas	1
C4, 5	ECEA1VU102	1000μF, 35V	2
C8~10	ECEA1VU100	10μF, 35V	3
C11	ECCR1H471J	470pF	1
C12	ECEA0JU222	2200μF, 6.3V	1
C14	ECEA1HN010S	1μF, 50V	1
C16	ECEA0JU470	47μF, 6.3V	1
C17	ECCR1H101J	100pF	1
C18	ECEA1VU100	10μF, 35V	1
C19	ECCR1H221J	220pF	1
C20	ECQV1H473JZ	0.047μF	1
C21	ECEA50Y3R3	3.3μF, 50V	1
C22	ECEA50Y6R8	6.8μF, 50V	1
C23	ECEA1HUR47	0.47μF, 50V	1
C24	ECEA1EU100	10μF, 25V	1
C25	ECEA1CU470	47μF, 16V	1
C26	ECQG1H102KZ	0.001μF	1

HP HEADPHONES CIRCUIT

Ref. No.	Part No.	Description	Per/Set
JACK			
JK1	SJJG100A	Jack	1
RESISTORS			
R1, R2 ⚠	ERD50FJ681	680Ω, 1/2W, Flame-Proof	2

MKB MANUAL KEYBOARD CIRCUIT

Ref. No.	Part No.	Description	Per/Set
INTEGRATED CIRCUIT			
IC1	SVIGM74LS138	Decoder	1
DIODES			
S D1~44	MA162A	MA150IR	44
SWITCHES			
S1~7, 38~44	SSPG7001A	Rubber Switch (7 pcs. on one)	2
S8~37	SSPG6001A	Rubber Switch (6 pcs. on one)	5
CAPACITORS			
C1	ECKR1E473ZV	0.047μF	1
C2	ECEA0JK470	47μF, 6.3V	1

PKB PEDAL KEYBOARD CIRCUIT

Ref. No.	Part No.	Description	Per/Set
TRANSISTORS			
S Q1, 2, 4	2SA1015-GR	2SA933STRS (SUB. Part)	3
S Q5~17	2SC2320LFG	2SC1310FG (SUB. Part)	13
SWITCHES			
S1~13	SHGG50A	Rubber Switch (5 pcs. on one)	3
RESISTORS			
R1, 2	ER0S2CKF4700	470Ω, ±1%	2
R3	ERDS2TJ472	4.7KΩ	1
R5	ER0S2CKF4700	470Ω, ±1%	1
R7	ERDS2TJ472	4.7KΩ	1
R8	ERDS2TJ103	10KΩ	1
R9	ERDS2TJ472	4.7KΩ	1
R10	ERDS2TJ103	10KΩ	1
R11	ERDS2TJ472	4.7KΩ	1
R12	ERDS2TJ103	10KΩ	1
R13	ERDS2TJ472	4.7KΩ	1
R14	ERDS2TJ103	10KΩ	1
R15	ERDS2TJ472	4.7KΩ	1
R16	ERDS2TJ103	10KΩ	1
R17	ERDS2TJ472	4.7KΩ	1

Ref. No.	Part No.	Description	Per/Set
R18	ERDS2TJ103	10KΩ	1
R19	ERDS2TJ472	4.7KΩ	1
R20	ERDS2TJ103	10KΩ	1
R21	ERDS2TJ472	4.7KΩ	1
R22	ERDS2TJ103	10KΩ	1
R23~29	ER0S2CKF4700	470Ω, ±1%	7
R30	ER0S2CKF1001	1KΩ, ±1%	1
R32	ERDS2TJ472	4.7KΩ	1
R33	ERDS2TJ103	10KΩ	1
R34	ERDS2TJ472	4.7KΩ	1
R35	ERDS2TJ103	10KΩ	1
R36	ERDS2TJ472	4.7KΩ	1
R37	ERDS2TJ103	10KΩ	1
R38	ERDS2TJ472	4.7KΩ	1
R39	ERDS2TJ103	10KΩ	1
R40	ERDS2TJ472	4.7KΩ	1
R41	ERDS2TJ103	10KΩ	1
R42~45	ER0S2CKF4700	470Ω, ±1%	4
R46	ER0S2CKF2201	2.2KΩ, ±1%	1
R51	ERDS2TJ472	4.7KΩ	1

EXP EXP CIRCUIT

Ref. No.	Part No.	Description	Per/Set
CDS			
CS1	SVEG5	Light Sensitive Device	1

■ WIRING PARTS

Ref. No.	Part No.	Description	Per/Set
W1	SWKG1077SSA	Connector, with Wire	1
W2	SWKG1336SSA	Connector, with Wire	1
W3	SWKG0876SSB	Connector, with Wire	1
W4	SWKG06103SSA	Connector, with Wire	1
○ W5	SWKG1349SSA	Connector, with Wire	1
○ W6	SWKG1350SSA	Connector, with Wire	1
○ W7	SWKG1422SSA	Connector, with Wire	1
○ W8	SWKG0715ZB	Connector, with Wire	1
W9	SWKG1337SSA	Connector, with Wire	1
○ W10	SWKG04157SSA	Connector, with Wire	1
W11	SWKG0326LTA	Connector, with Wire	1
○ W12	SWKG04158LSA	Connector, with Wire	1
○ W13	SWKG04156LSB	Connector, with Wire	1
○ W14	SWKG1088LSA	Connector, with Wire	1
○ W15	SWKG04155ZB	Connector, with Wire	1
○ W16	SWKG06134LSA	Connector, with Wire	1
○ W17	SWKG03124ZA	Connector, with Wire	1
○ W18	SWKG0247ZB	Connector, with Wire	1

REPLACEMENT PARTS LIST.....Cabinet and Chassis Parts

Notes:

1. Important safety notice
   Components identified by ⚠ mark have special characteristics important for safety. When replacing any of these components, use only manufacturer's specified parts.
2. ○ mark are new parts.
3. For part No. with area mark, check the area when placing an order.

■ CABINET & CHASSIS PARTS

Ref. No.	Part No.	Description	Per/Set
SWITCH			
S1 ⚠	SSHG1050A	Power Switch	1
TRANSFORMER			
○ T1 ⚠	SLTG5M48	Power Transformer	1
○ T1 M MC ⚠	SLTG5M49	Power Transformer	1
AC POWER CORD & PLUG			
PC1 EK XS XD ⚠	SJAG39	AC Cord	1
PC1 XL XR ⚠	SJAG61	AC Cord	1
PC1 M MC ⚠	SJAG62	AC Cord	1
PC1 ⚠	SJAG41	AC Cord, others	1
PC2 X ⚠	SJP5213-1	Attachment Plug, [X] area	1
PC3 XD ⚠	SJPG1350A	Attachment Plug, [XD] area	1
SPEAKER			
SP2	EAS15S06A	6×13cm, 16Ω	1
SP3	EAS65PH31A	6.5cm, 8Ω	1

	Ref. No.	Part No.	Description	Per/Set
	CABINET			
	1 [EX25L]	SKGG1B130A	Music Rack	1
○	2 [EX25L]	SHGG6261A	Rubber	1
○	3 [EX25L]	SYWGA1060B	Upper Control Panel	1
○	3 [EX25]	SYWGA1060A1	Upper Control Panel	1
○	4	SGUG90A	Display Cover Panel	1
○	5	SGWG8230B	Lower Control Panel, Left	1
○	6	SGWS8220D	Lower Control Panel, Right	1
○	7	SHSG3940A	Felt	1
	8	SHRG9920A	Spacer	1
○	9	SHSG3950A	Felt	1
	10	SKEG1240A	Cover	1
	11	SUWG2980A	Bracket	1
	12	SHSG5820A	Felt	1
	13	SHSG5830A	Felt	1
○	14	SGXG3210A	Ornament, Keyboard	1
○	15 [EX25]	SKZG8520A	Keyboard Cover Ass'y	1
	15-1 [EX25]	SBHG190A	Hinge	3
	15-2 [EX25]	SBHG200A	Hinge	3
	15-3 [EX25]	SKHG80A	Grip	2
	16 [EX25]	SBHG210A	Hinge	2
○	17 [EX25]	SKZG7831A	Rear Board (Upper)	1
○	17 [EX25L]	SKZG7830A	Rear Board (Upper)	1
	18 XL XR	SJS9334A	AC Inlet Caver	1
	18	SJS9231A	AC Inlet Caver	1
○	19	SMKG3470A	Jack Panel	1
○	20 EN EL EZ M MC	SMKG3480A	AC Panel	1
○	20	SMKG3481A	AC Panel, others	1
○	21	SMKG3490A	Headphone Jack Panel	1
	22	SHSG2870A	Felt	1
○	23	SGXG3200A	Ornament, Front	1
	24	SGBG160A	Technics Badge	1
	25	SGKG980A	Headphone label	1
	KNOBS, BUTTONS			
	26	SBCG110B	Button (Power Switch)	1
	27	SBNG7050A	KNOB (TEMPO, TRANSPOSE)	2
○	28	SBCG1330A	Button (UPPER SOLO)	1
○	29	SBCG1340A	Button (UPPER POLY)	1
○	30	SBCG1350A	Button (CELESTE, TAB TREMOLO)	1
○	31	SBCG1360A	Button (BASS)	1
○	32	SBCG1370A	Button (SUSTAIN)	1
○	33	SBCG1380A	Button (LOWER POLY)	1
○	34	SBCG1390A	Button (VSC, ORCHESTRAL CONDUCTOR)	1
○	35	SBCG1400A	Button (RHYTHM)	1
○	36	SBCG1410A	Button (MAIN VOL)	1
○	37	SBCG1420A	Button (FILL IN & INTRO, ENDING)	1
○	38	SBCG1430A	Button (PLAY MODE)	1
○	39	SBCG1440A	Button (UPPER TAB VOICES)	1
○	40	SBCG1450A	Button (LOWER TAB VOICES)	1
○	41	SBCG1480A	Button (PLAY SEQUENCER)	1
	MANUAL KEYBOARD			
	42	STBG1150A	Wite Key (Top Octave C Key)	2
	43	STBG1120A	Wite Key (B & E Key)	14
	44	STBG1110A	Wite Key (D Key)	6
	45	STBG1100A	Wite Key (C & F Key)	14
	46	STBG1140A	Wite Key (A Key)	8

	Ref. No.	Part No.	Description	Per/Set
	47	STBG1130A	Wite Key (G Key)	8
	48	STBG2070A	Black Key	36
	49	SUSG270A	Spring	88
	50	SHSG1931A	Felt	4
	51	SHGG9050A	Key Guide Rubber	88
	52	SSPG7001A	Rubber Switch (7 pcs. on one)	4
	53	SSPG6001A	Rubber Switch (6 pcs. on one)	10
	SCREWS & WASHERS			
	N1	XTB4+12A	Screw	43
	N2	XTW3+10Q	Screw	37
	N3	XTS3+6B	Screw	2
○	N4	XYN4+F40	Screw with Washer	1
	N5	XYN4+F10	Screw with Washer	1
	N6	SNEG740A	Screw	2
	N7	XTB3+5C	Screw	16
	N8	XTT4+10A	Screw	3
	N9	XYN5+C10	Screw with Washer	1
	N10	XYN3+F6FZ	Screw with Washer	4
○	N11	XTB3+5FFZ	Screw	24
○	N12	XTB3+8GFZ	Screw	4
○	N13	XTW3+10JFZ	Screw	8
	N14	XYN4+F10FZ	Screw with Washer	7
	N15	XTT4+16AFZ	Screw	6
	N16	XTB35+12A	Screw	10
	N17	SNEG1241A	Screw	4
	N18	XTW3+8JFZ	Screw	3
	N19	XTB35+8A	Screw	4
	N20	XTT4+30A	Screw	2
	N21	XTB35+10A	Screw	8
	N22	XYN4+F12	Screw with Washer	4
○	N23	SNEG2560A	Screw with Washer	4
	N24	SNEG770A	Washer	1
	N25	XNS12FZ	Nut	1
	N26	SNEG150A	Washer	9
	N27	XWA5B	Washer	2
	N28	XSN5+85FVC	Screw	2
	N29	XYN5+C25FVC	Screw with Washer	7
	N30	XTB35+20A	Screw	4
○	N31	XTB3+8BFVC	Screw	2
	N32	XTT35+10AFVC	Screw	5
	N33	XTW3+10T	Screw	24

EXPLODED VIEWS OF CABINET

SX-EX25L only

SX-EX25 only

Ass'y

CP P.C.B.

CPL P.C.B.

FDCN P.C.B.

CPSL P.C.B.

MAIN P.C.B.

AS P.C.B.

HP P.C.B.

DP P.C.B.

MANUAL KEYBOARD

MKB P.C.B.

■SIDE CONTROL PANEL BUTTONS

EXPLODED VIEWS OF STAND AND BENCH

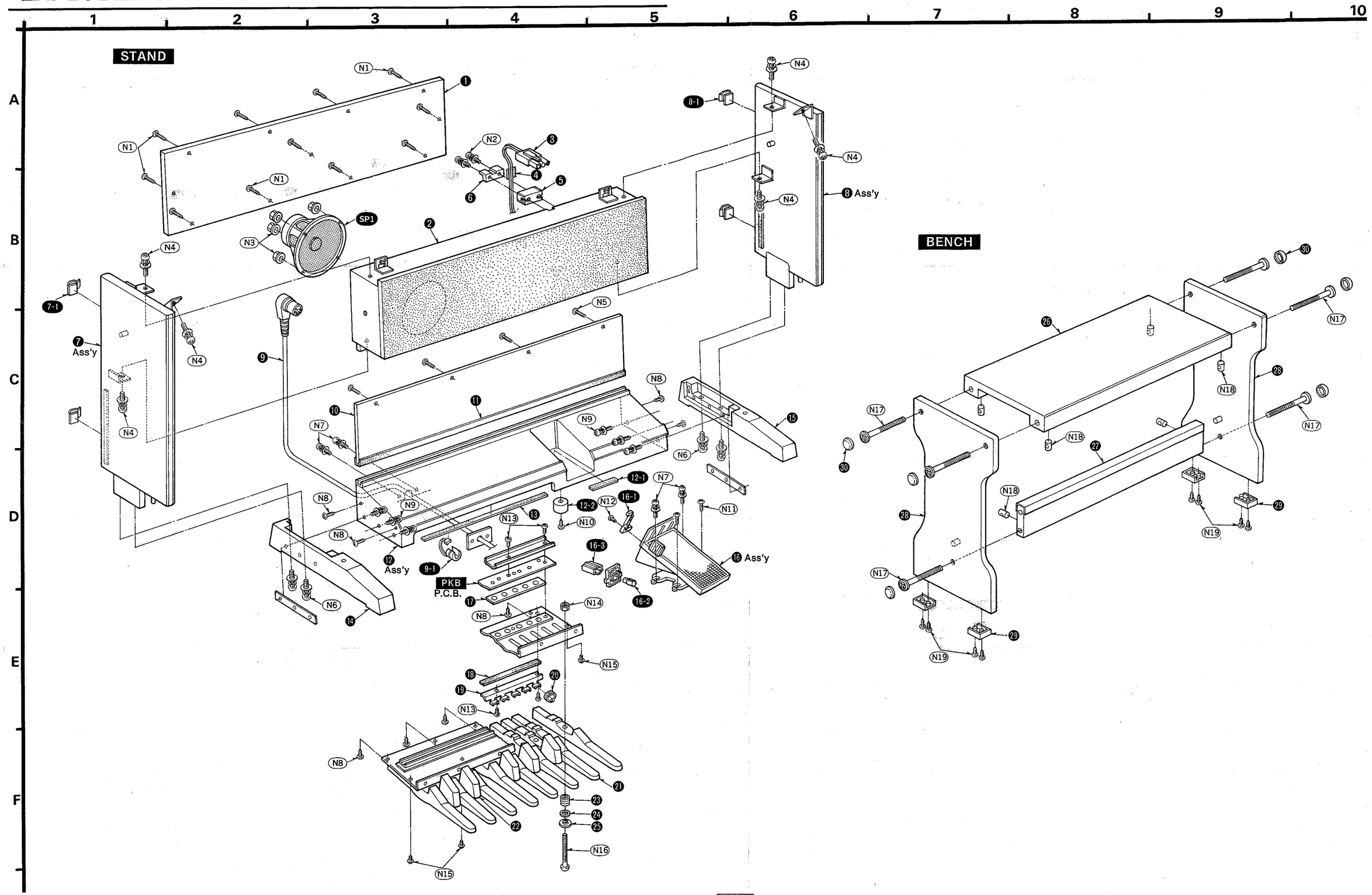

■ STAND & BENCH

	Ref. No.		Part No.	Description	Per/Set
				SPEAKER	
	SP1		EAS20PL255A	20cm, 4Ω	1
				STAND	
○	1		SKFG1291A	Rear Board	1
○	2		SKZG9420B	Speaker Box	1
○	3		SWKG03124ZA	Wire with Connector	1
○	4		SHRGA7390	Sponge	1
	5		SHRG1110A	Cord Clamper	1
	6		SHRG1120A	Cord Clamper	1
○	7		SKSG2790A	Left Plank Ass'y	1
	7-1		SHRG9620A	Cord Clamper	2
○	8		SKSG2800A	Right Plank Ass'y	1
	8-1		SHRG9620A	Cord Clamper	2
○	9		SWKG0715ZB	Wire with Connector	1
	9-1		SHRG1160A	Cord Clamper	1
○	10		SKFG2530A	Rear Board	1
○	11		SHSG6140A	Felt	1
○	12		SKZGE300A	Pedal Box Ass'y	1
	12-1		SHSG3170A	Felt	1
	12-2		SKLA7-2	Foot	1
	13		SHSG6030A	Felt	1
○	14		SKLG280A	Leg, Except for [M] area	1
○	14	M	SKLG281A	Leg, [M] area only	1
○	15		SKLG290A	Leg, Except for [M] area	1
○	15	M	SKLG291A	Leg, [M] area only	1
	16		SXVG5110A	Expression Pedal Ass'y	1
	16-1		SSHG14	Foot Switch	1
	16-2		XAMR55P	Lamp	1
	16-3		RJS205ZA	Socket	1
	17		SHGG50A	Rubber Switch (5 pcs. on one)	3
	18		SHSG1600B	Felt	1
	19		STBG4011A	Key Guide	1
	20		SHSG1460A	Felt (Key Guide)	13
	21		STBG1091C	White Key	8
	22		STBG2052A	Black Key	5
	23		SUSG180A	Spring	13
	24		SHGG8130A	Rubber	13
	25		SHRG9240A	Spacer	13
				BENCH	
	26		SKPG920A	Top Cover	1
	27		SKZG7680A	Crossboard	1
	28		SKSG1860A	Plank	2
	29		SHRG2060C	Foot	4
	30		SNEG1760B	Cap	6

	Ref. No.	Part No.	Description	Per/Set
			SCREWS & WASHERS	
○	N1	XTT35+30AFZ	Screw	11
	N2	XYN3+F30	Screw with Washer	2
	N3	SNE499-1	Nut	4
○	N4	SNEG2560A	Screw with Washer	6
	N5	XST4+20FZ	Screw	4
	N6	XYN5+F16	Screw with Washer	4
	N7	XYN4+F20FZ	Screw with Washer	4
	N8	XTT4+16A	Screw	8
	N9	XYN4+F30	Screw with Washer	6
	N10	XTB35+16A	Screw	1
	N11	XTT4+16AFZ	Screw	2
	N12	XTN26+6B	Screw	1
	N13	XTB3+6B	Screw	11
	N14	XNG5BS	Nut	13
	N15	XTW3+8J	Screw	3
	N16	SNEG360A	Bolt	13
	N17	SNEG1720B	Bolt	6
	N18	SNEG1710A	Nut	6
	N19	XTB3+25A	Screw	8

PACKING

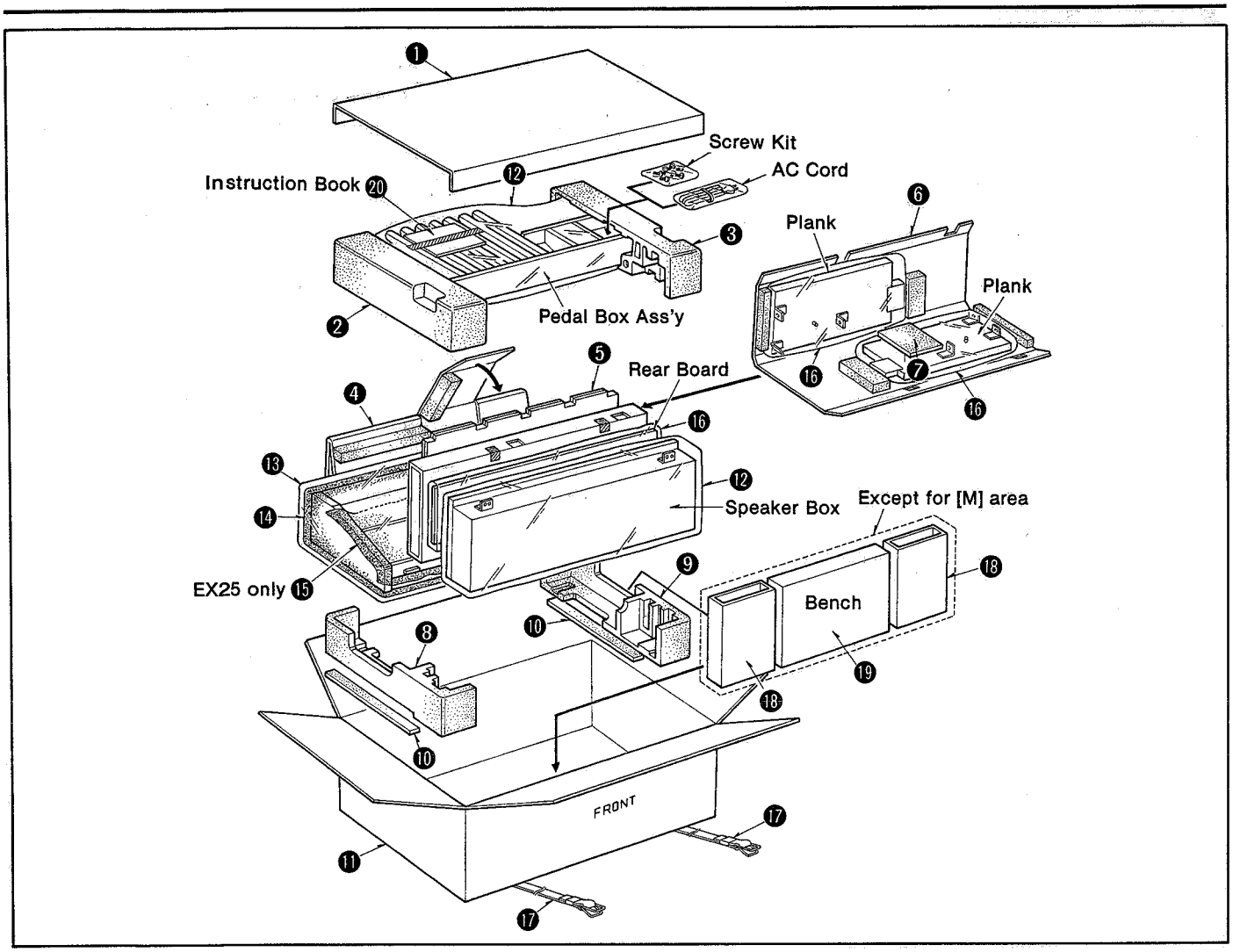

■ PACKING PARTS (Except for [M] area) ı)

	Ref. No.		Part No.	Description	Per/Set
○	1		SPNG2068	Pad	1
○	2		SPNG5809B	Cushion Pad	1
○	3		SPNG5810B	Cushion Pad	1
○	4		SPNG2071A	Pad	1
○	5		SPNG2072A	Music Rack Case	1
○	6		SPNG2070A	Planks Case	1
○	7		SPNG5806A	Cushion Pad	1
○	8		SPNG5807A	Cushion Pad	1
○	9		SPNG5808A	Cushion Pad	1
○	10		SPNG3120A	Pad	2
○	11	[EX25]	SPNG2064A	Packing Case, EX25 only	1
○	11	[EX25L]	SPNG2060A	Packing Case, EX25L only	1
	12		SPHG1630A	Polyethylene Bag	2
	13		SPHG1110A	Polyethylene Bag	1
	14		SPHG280A	Protection Sheet	1
○	15	[EX25]	SPHG2260A	Protection Sheet, EX25 only	1
	16		SPHG1641A	Polyethylene Bag	3
	17		SPSG40A	Band	2
○	18		SPNG2073A	Pad	2
	19		SPNG1784A	Packing Case, Bench	1
	INSTRUCTION BOOK				
○	20	EN	SQFGA1360	Instruction Book, [EN] only	1
○	20		SQFGA1390	Instruction Book	1

■ PACKING PARTS (Products for [M] area)

	Ref. No.	Part No.	Description	Per/Set
○	1	SPNG2069	Pad	1
○	2	SPNG5809B	Cushion Pad	1
○	3	SPNG5810B	Cushion Pad	1
○	4	SPNG2071A	Pad	1
○	5	SPNG2072A	Music Rack Case	1
○	6	SPNG2070A	Planks Case	1
○	7	SPNG5806A	Cushion Pad	1
○	8	SPNG5807A	Cushion Pad	1
○	9	SPNG5808A	Cushion Pad	1
○	10	SPNG5845A	Pad	2
○	11	SPNG2062A	Packing Case	1
	12	SPHG1630A	Polyethylene Bag	2
	13	SPHG1110A	Polyethylene Bag	1
	14	SPHG280A	Protection Sheet	1
	16	SPHG1641A	Polyethylene Bag	3
	17	SPSG40A	Band	2
	INSTRUCTION BOOK			
○	20	SQFGA1381	Instruction Book	1